REV.	ECN NO OR DESCRIPTION	REVISED	DATE
C	ADD GREEN PRODUCT IDENTIFICATION MARK	KENSON	8/18'09

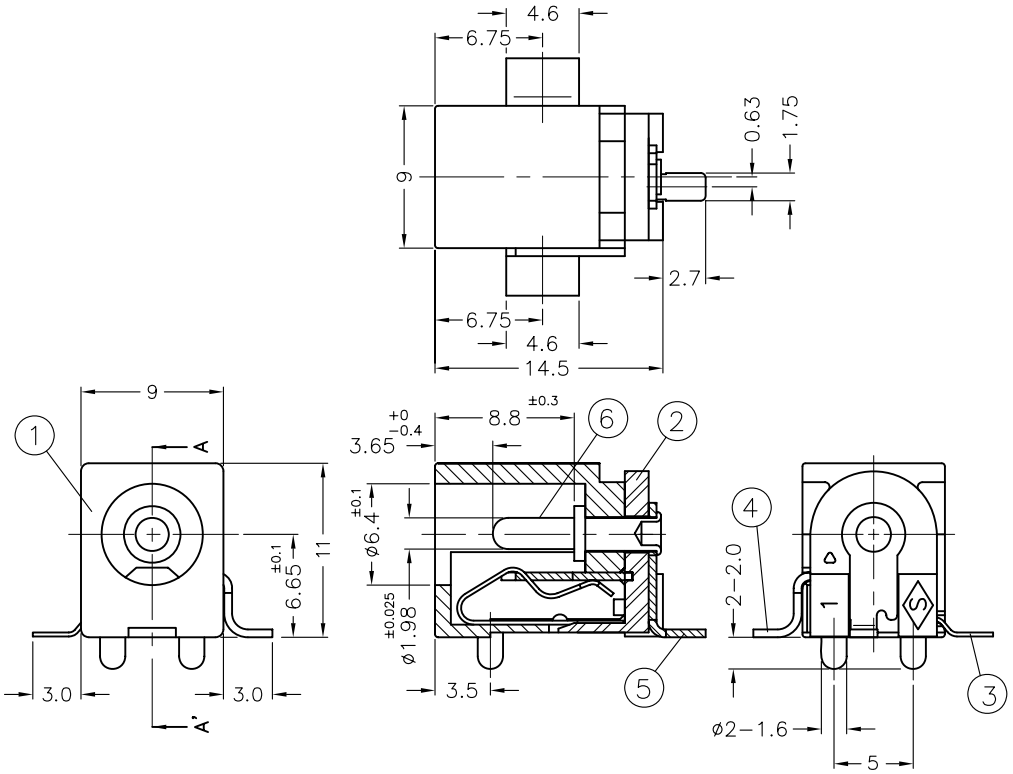

SPECIFICATIONS:
1.RATING: DC 14V 3.9A
2.INSERTION FORCE: 0.2KG−2KG
WITHDRAWAL FORCE: 0.2KG−1.5KG
3.INSULATION RESISTANCE BETWEEN ANY ADJACENT TERMINALS SHALL NOT BE LESS THAN 100 MEGOHMS BY 500 VOLTS MEGGER.
4.JACK SHALL WITHSTAND 250 VOLTS BETWEEN ANY ADJACENT TERMINAL FOR ONE MINUTE.
5.CONTACT RESISTANCE SHALL NOT EXCEED 0.03 OHMS.
6.JACK SHALL WITHSTAND 5,000 CYCLES OF INSERTION AND WITHDRAWAL WITH TESTING PLUG,AND CONTACT RESISTANCE SHALL NOT EXCEED 0.1 OHMS.
7.MEASURING CONDITION:
TEMPERATURE: FROM 5°C TO 35°C.
RELATIVE HUMIDITY: FROM 40% TO 85%.
8.ENVIRONMENTAL SPECIFICATIONS:
8.1 HUMIDITY TEST: HUMIDITY 90% TO 95% TEMPERATURE 40°C ± 2°C FOR 96 HOURS.
8.2 HEAT TEST: TEMPERATURE 70°C ± 2°C (HUMIDITY BELOW 50%) FOR 96 HOURS.
8.3 COLD TEST: TEMPERATURE −40°C ± 2°C FOR 96 HOURS.
9.TO CONFORM TO THE SINGATRON HSF SPECIFICATION.
10.GREEN PRODUCT IDENTIFICATION MARK IN JACK: △
11.GREEN PRODUCT IDENTIFICATION LABEL IN PACKING: G.P. PASS
12. FOR LEAD−FREE PROCESS.

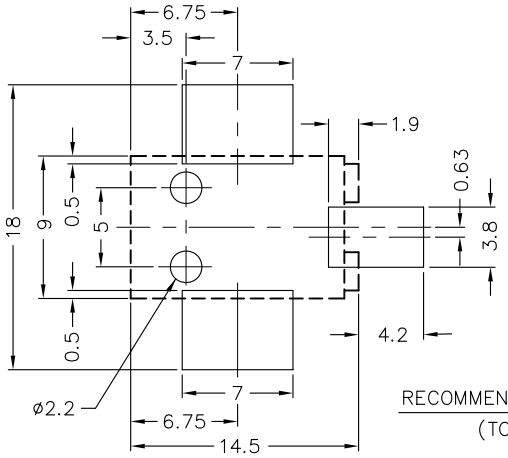

RECOMMEND MOUNTING PADS
(TOP VIEW)

NO	DESCRIPTION	QTY	MATERIAL	PLATING & COLOR
6	PIN	1	BRASS BAR	NICKEL PLATING
5	TERMINAL	1	BRASS 0.5t	SILVER PLATING
4	SHUNT TERMINAL	1	BRASS 0.5t	SILVER PLATING
3	TIP SPRING	1	PHOSPHOR BRONZE 0.25t	SILVER PLATING
2	COVER	1	HIGH TEMP. UL 94V−0 THERMOPLASTIC	BLACK COLOR
1	BODY	1	HIGH TEMP. UL 94V−0 THERMOPLASTIC	BLACK COLOR

UNLESS OTHERWISE SPECIFED TOLERANCES

DECIMALS: X :±0.5, X.X :±0.3, X.XX :±0.2
ANGLES: X :±2°, X.X :±1°

Singatron Electronic(Chung−Shan) Co., Ltd.
信音電子(中山)有限公司

TITEL	DC POWER JACK			
DWN	KENSON 8/18'09	PART NO. 2DC−0415−D01		
CHKD	HARVEY	SCALE: 3/1	UNIT: mm	
APVD	ROBIN	SIZE: A4	SHEET: 10F1	REV: C

CUSTOMER COPY

文件編號:RD−06−035−2A