REV.	ECN NO OR DESCRIPTION	REVISED	DATE
A	PDR NO:T100510-3A	Jamvs	2010.07.05
B	ECN NO: S101133	ANDY	2011.01.17
C	ECN NO: S120932	Danfeng	2012.10.10
D	ECN NO: S141150	Ken	2015.1.28

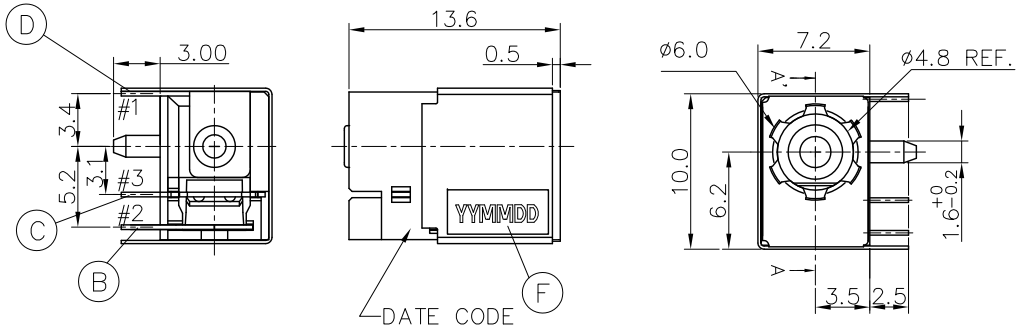

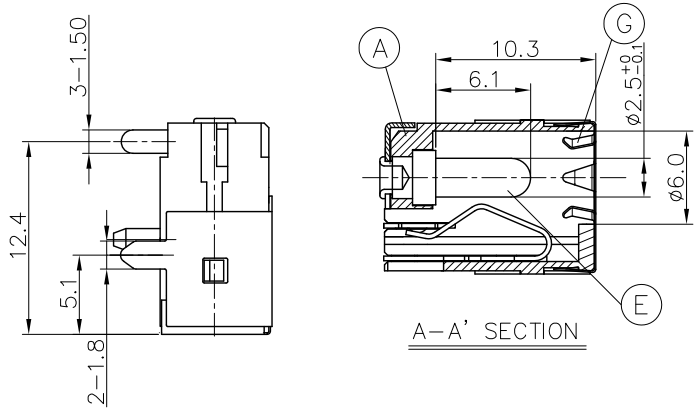

SPECIFICATIONS:

1. ELECTRICAL CHARACTERISTICS:
   1-1. RATING: 20V 7A (24V 5A).
   1-2. CONTACT RESISTANCE: 30mΩ MAX.(INITIAL)
   1-3. DIELECTRIC WITHSTANDING VOLTAGE: 500V AC FOR ONE MINUTE
   1-4. INSULATION RESISTANCE: 100MΩ MIN. MEASURED BY 500 VDC
2. MECHANICAL CHARACTERISTICS:
   2-1. INSERTION FORCE : 0.4~3.0 KGF
   2-2. WITHDRAWAL FORCE : 0.4~3.0 KGF
3. LIFE TEST: 5,000 CYCLES MIN.
4. OTHER GENERAL SPEC. TO REFER "2DC-G026 SERIES SPEC".
5. TO CONFORM TO SINGATRON HAZARDOUS SUBSTANCE FREE SPEC.
6. HALOGEN FREE PRODUCT IDENTIFICATION MARK ON JACK:
7. HALOGEN FREE PRODUCT IDENTIFICATION LABEL ON PACKAGING:

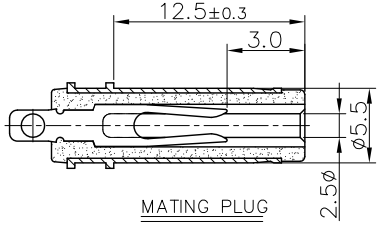

MATING PLUG

(TOL: ±0.05)

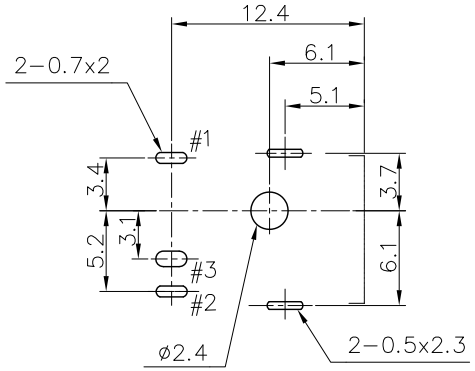

RECOMMENDED P.C.B LAYOUT

TOP VIEW (TOL: ±0.05)

SCHEMATIC

- #1 CENTER PIN(+)
- #3 SHUNT TERMINAL
- #2 TIP SPRING(-)

NO	DESCRIPTION	QTY	MATERIAL	PLATING & COLOR
G	GROUNDING SPRING	1	STAINLESS 0.1t	N/A
F	SHIELDING	1	BRASS STRIP 0.2t	NICKEL PLATING
E	PIN	1	BRASS BAR	NICKEL PLATING
D	TERMINAL	1	BRASS STRIP 0.3t	SILVER PLATING
C	SHUNT TERMINAL	1	C2680-H 0.3T	SILVER PLATING
B	TIP SPRING	1	YCUTM-H 0.3T	SILVER PLATING
A	BODY	1	HIGH TEMP. THERMOPLASTIC UL 94V-0	BLACK COLOR

UNLESS OTHERWISE SPECIFED TOLERANCES

DECIMALS: X :±0.5, X.X :±0.3, X.XX :±0.2

ANGLES: X :±2°, X.X :±1°

Singatron Enterprise Co., Ltd.
信音企業股份有限公司

TITLE	DC POWER JACK		
DWN	ken	PART NO.:2DC-G026-B32	
CHKD	cerry	SCALE:3:1	UNIT: mm
APVD	Liao	SIZE: A3	SHEET:1 OF 1 REV:D

CUSTOMER COPY

文件編號 RD-06-043-A