| REV. | ECN NO OR DESCRIPTION | REVISED | DATE |
|---|---|---|---|
| C | ECN NO: S081005 | BOYE | 2008.11.24 |
| D | ECN NO: S120324 | Angus | 2012.05.31 |
| D1 | ECR NO: S150320-Q | YUREN | 2015.04.24 |

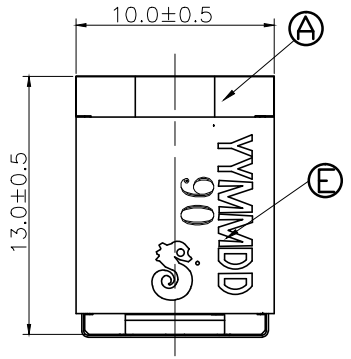


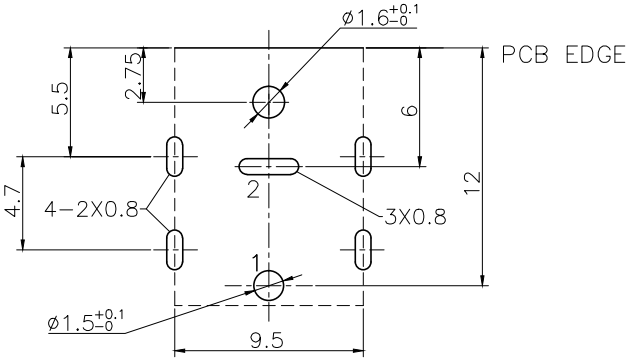


RECOMMENDED P.C.B LAYOUT

TOP VIEW (TOLERANCE ±0.05)

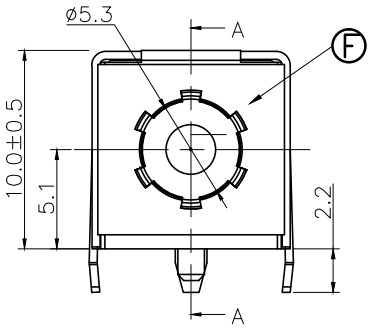


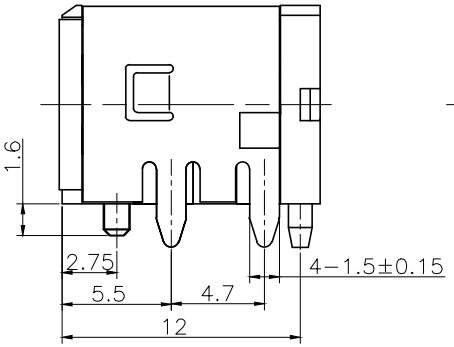


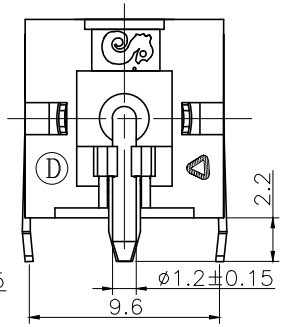


SPECIFICATIONS:

1.RATING: DC 20V 10A 44uF
2.INSERTION FORCE: 3.0Kg MAX.
WITHDRAWAL FORCE: 1.0Kg~3.0Kg
3.INSULATION RESISTANCE BETWEEN ANY ADJACENT TERMINALS SHALL NOT BE LESS THAN 100 MEGOHMS BY 500 VOLTS MEGGER.
4.JACK SHALL WITHSTAND 250 VOLTS BETWEEN ANY ADJACENT TERMINAL FOR ONE MINUTE.
5.CONTACT RESISTANCE SHALL NOT EXCEED 30mΩ
6.JACK SHALL WITHSTAND 5,000 CYCLES OF INSERTION AND WITHDRAWAL WITH TESTING PLUG,AND CONTACT RESISTANCE SHALL NOT EXCEED 50mΩ
7.MEASURING CONDITION:
TEMPERATURE: FROM 5°C TO 35°C.
RELATIVE HUMIDITY: FROM 40% TO 85%.
8.ENVIRONMENTAL SPECIFICATIONS:
8.1 HUMIDITY TEST: HUMIDITY 90% TO 95% TEMPERATURE 40°C ±2°C FOR 96 HOURS.
8.2 HEAT TEST: TEMPERATURE 70°C ± 2°C (HUMIDITY BELOW 50%) FOR 96 HOURS.
8.3 COLD TEST: TEMPERATURE −40°C ± 2°C FOR 96 HOURS.
9.MATING PLUG : SINGATRON'S P/N : 2DP-G213-BY5(PLUG SET)
10.PACKING: TAPE&REEL
11.PRINTED DATE CODE"YYMMDD"ON TOP OF CONNECTOR.YYMMDD
DD: DAY
MM: MONTH
YY: YEAR
12.RATING:DC 20V 10A 44uF DEPAND ON MATING PLUG DETAIL TYPE
13.TO CONFORM TO THE SINGATRON HAZARDOUS SUBSTANCE FREE SPECIFICATION
14.GREEN PRODUCT IDENTIFICATION MARK ON JACK: △
15.GREEN PRODUCT IDENTIFICATION LABEL ON PACKAGING: G.P. PASS
16.FOR LEAD FREE PROCESS.

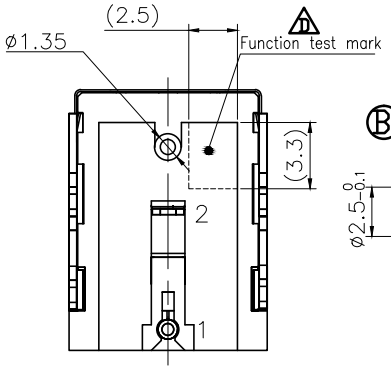


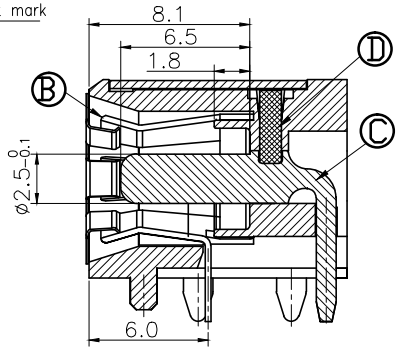


Section A-A

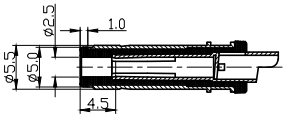


ø5.5 PULG(2DP-G213-BY5)

1.RATING: DC 20V 10A 44uF

SCHEMATIC

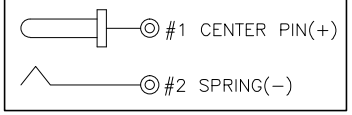


| NO | DESCRIPTION | QTY | MATERIAL | PLATING & COLOR |
|---|---|---|---|---|
| F | GROUND | 1 | SUS 304 0.15t | N/A |
| E | SHELL | 1 | SPCC-SD 0.4t | Solderable Ni |
| D | STOPPER | 1 | HIGH TEMP.THERMOPLASTIC UL94V-0 | BLACK |
| C | PIN | 1 | HBI59-1.5B | Ag 20u'' Min. |
| B | SPRING | 1 | COPPER ALLOY 0.3t | Sn 60u"Min,Ni 60u"Min. |
| A | BODY | 1 | HIGH TEMP.THERMOPLASTIC UL94V-0 | YELLOW |

UNLESS OTHERWISE SPECIFED TOLERANCES

DECIMALS: X :±0.5, X.X :±0.3, X.XX :±0.2

ANGLES: X :±2°, X.X :±1°

Singatron Enterprise Co., Ltd.
信音企業股份有限公司

| | | | |
|---|---|---|---|
| TITLE | DC POWER JACK | | |
| DWN | YUREN | PART NO. 2DC-G213-B29 | |
| CHKD | | SCALE:4:1 | UNIT: mm |
| APVD | | SIZE: A3 | SHEET:1 OF 1 REV:D1 |

CUSTOMER COPY

文件編號:RD-06-043-A