REV.	ECN NO OR DESCRIPTION	REVISED	DATE
C	ECN NO: S081005	BOYE	2008.11.24

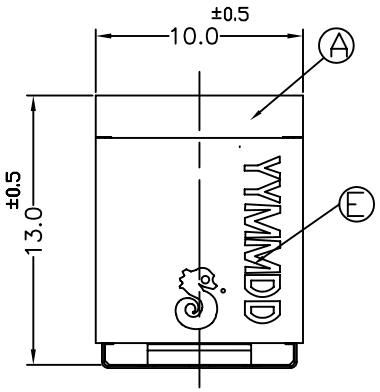

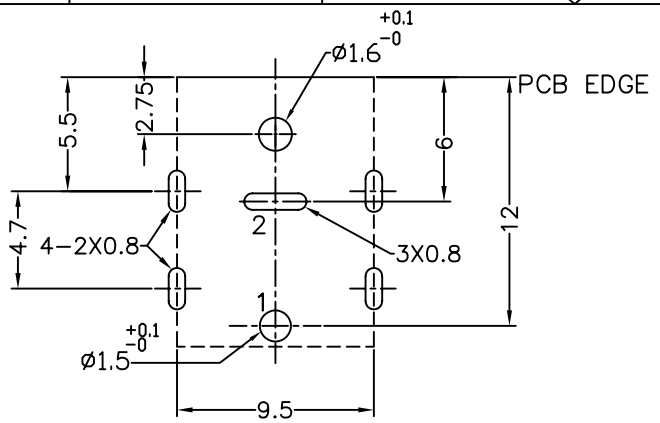

RECOMMENDED P.C.B LAYOUT

TOP VIEW (TOLERANCE ±0.05)

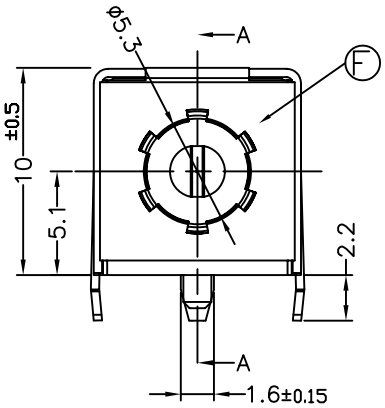

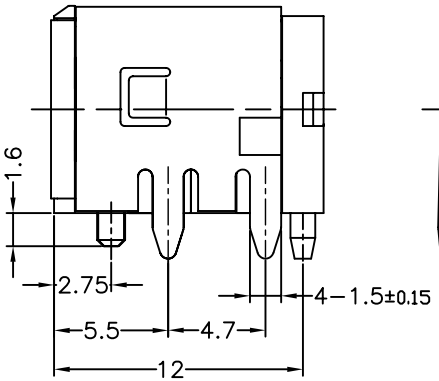

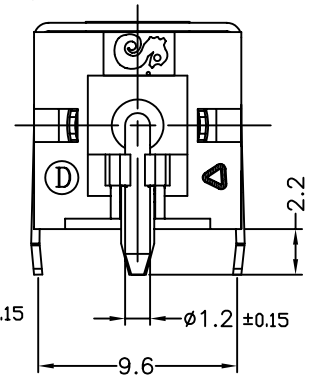

SPECIFICATIONS:
1.RATING: DC 20V 10A 44uF
2.INSERTION FORCE: 3Kg MAX.
WITHDRAWAL FORCE: 1.0Kg~3Kg
3.INSULATION RESISTANCE BETWEEN ANY ADJACENT TERMINALS SHALL NOT BE LESS THAN 100 MEGOHMS BY 500 VOLTS MEGGER.
4.JACK SHALL WITHSTAND 250 VOLTS BETWEEN ANY ADJACENT TERMINAL FOR ONE MINUTE.
5.CONTACT RESISTANCE SHALL NOT EXCEED 30mΩ
6.JACK SHALL WITHSTAND 5,000 CYCLES OF INSERTION AND WITHDRAWAL WITH TESTING PLUG,AND CONTACT RESISTANCE SHALL NOT EXCEED 50mΩ
7.MEASURING CONDITION:
TEMPERATURE: FROM 5°C TO 35°C.
RELATIVE HUMIDITY: FROM 40% TO 85%.
8.ENVIRONMENTAL SPECIFICATIONS:
8.1 HUMIDITY TEST: HUMIDITY 90% TO 95% TEMPERATURE 40°C ±2°C FOR 96 HOURS.
8.2 HEAT TEST: TEMPERATURE 70°C ± 2°C (HUMIDITY BELOW 50%) FOR 96 HOURS.
8.3 COLD TEST: TEMPERATURE −40°C ± 2°C FOR 96 HOURS.
9.PACKING: TAPE&REEL
10.PRINTED DATE CODE"YYMMDD"ON TOP OF CONNECTOR.YYMMDD
DD: DAY
MM: MONTH
YY: YEAR
11.RATING:DC 20V 10A 44uF DEPAND ON MATING PLUG DETAIL TYPE
12.TO CONFORM TO THE SINGATRON HAZARDOUS SUBSTANCE FREE SPECIFICATION
13.GREEN PRODUCT IDENTIFICATION MARK ON JACK:△
14.GREEN PRODUCT IDENTIFICATION LABEL ON PACKAGING: G.P. PASS
15.FOR LEAD FREE PROCESS.

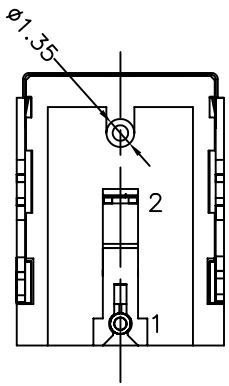

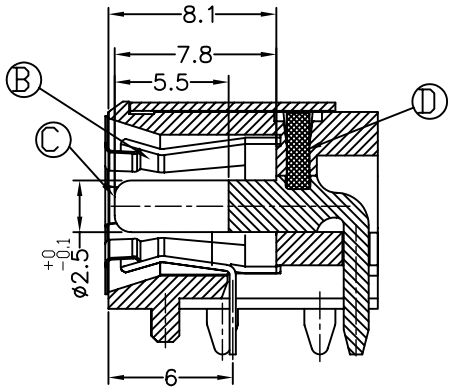

Section A-A

SCHEMATIC

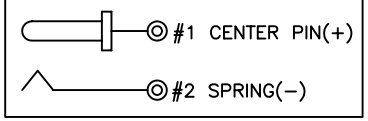

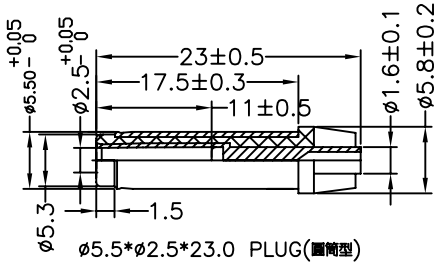

ø5.5*ø2.5*23.0 PLUG(圓筒型)

NO	DESCRIPTION	QTY	MATERIAL	PLATING & COLOR
F	GROUND	1	SUS 304 0.15t	N/A
E	SHELL	1	SPCC−SD 0.4t	NI 60u" Mim.(N4)
D	STOPPER	1	HIGH TEMP.THERMOPLASTIC UL94V−0	BLACK
C	PIN	1	HBI59−1.5B	Ag 20u" Min.
B	SPRING	1	COPPER ALLOY 0.3t	Sn 60u"Min,Ni 60u"Min.
A	BODY	1	HIGH TEMP.THERMOPLASTIC UL94V−0	BLACK

UNLESS OTHERWISE SPECIFED TOLERANCES

DECIMALS: X :±0.5, X.X :±0.3, X.XX :±0.2

ANGLES: X :±2°, X.X :±1°

Singatron Enterprise Co., Ltd.
信音企業股份有限公司

TITLE	DC POWER JACK		
DWN	BOYE 2008.11.24	PART NO. 2DC−G213−B35	
CHKD	Quan-Zhou 2008.11.28	SCALE:4:1	UNIT: mm
APVD	Max	SIZE: A3	SHEET:1 OF 1 REV: C

CUSTOMER COPY

文件編號:RD−06−043−A