REV.	ECN NO OR DESCRIPTION	REVISED	DATE
A	PDR NO:T230801-2A	HAOLAN	2023.12.13

For Quanta Only

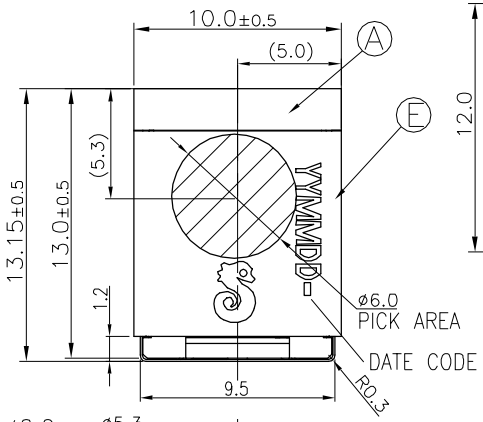

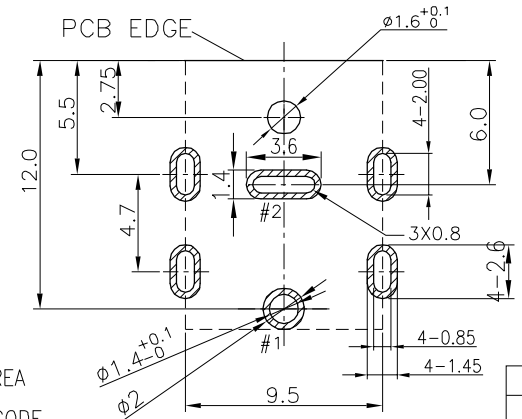

RECOMMENDED P.C.B LAYOUT

<TOP VIEW> TOLERANCE: ±0.05

SCHEMATIC

#1 CENTER PIN(+)

#2 SPRING(-)

SPECIFICATIONS:

1.ELECTRICAL CHARACTERISTICS:
   1-1.CONTACT RESISTANCE:30mΩMAX.(INITIAL)
   1-2.DIELECTRIC WITHSTANDING VOLTAGE:250V AC FOR ONE MINUTE.
   1-3.INSULATION RESISTANCE:100MΩMIN. MEASURED BY 500V DC.
2.MECHANICAL CHARACTERISTICS:
   2-1.INSERTION FORCE: 3.5Kgf Max.
   2-2.WITHDRAWAL FORCE: 0.8Kgf~3.5Kgf.
3.LIFE TEST:5000 CYCLES MIN.
4.OTHER GENERAL SPEC. TO REFER "2DC-G213 SERIES SPEC".
5.TO CONFORM TO SINGATRON HAZARDOUS SUBSTANCE FREE SPEC.
6.HALOGEN FREE PRODUCT IDENTIFICATION MARK ON JACK:
7.HALOGEN FREE PRODUCT IDENTIFICATION LABEL ON PACKAGING:
8.FOR REFLOW SOLDERING LEAD-FREE PROCESS.
9.PACKAGING: TAPE & REEL
10.THE PANEL'S ID MUST BE GREATER THAN THE PLUG'S OD WHICH MUST HAVE A DIFFERENCE OF LESS THAN OR EQUAL TO 0.5 mm.(AS SHOWN IN FIGURE 1.)

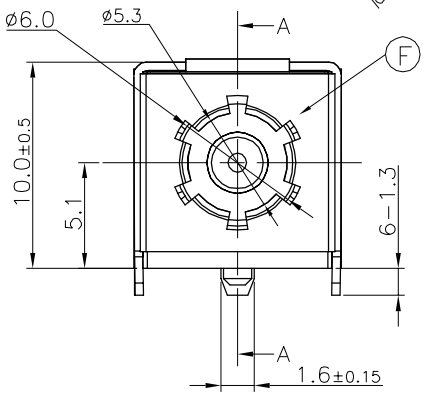

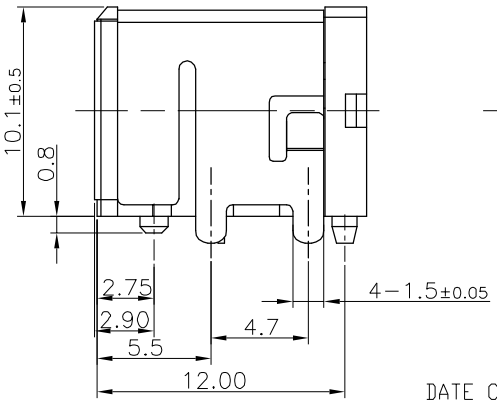

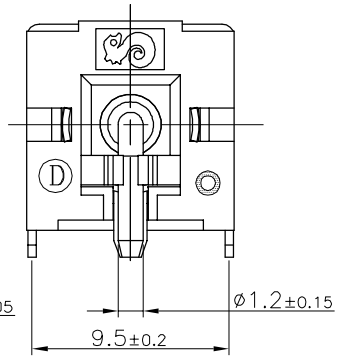

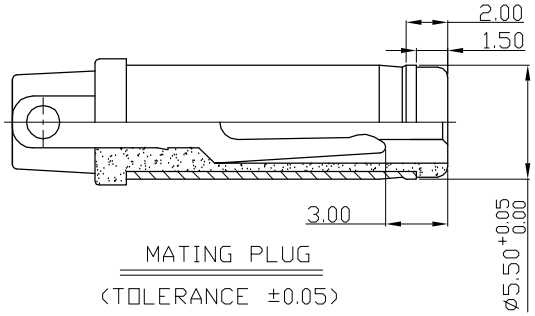

MATING PLUG

(TOLERANCE ±0.05)

DATE CODE: YYMMDD-

DD: DAY

MM: MONTH

YY: YEAR

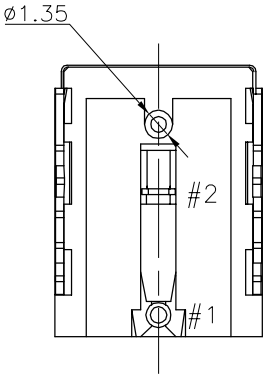

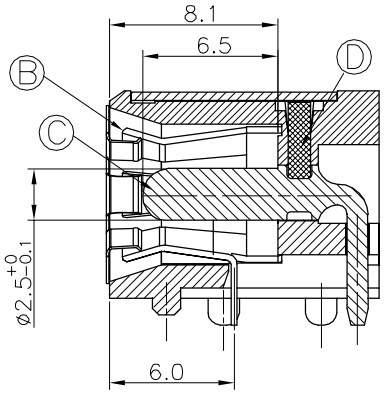

Section A-A

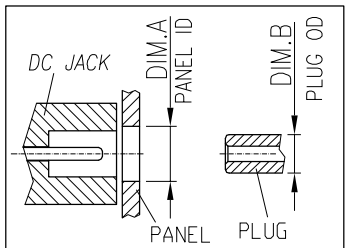

DIM. A-DIM.B < 0.5

FIGURE 1

NO	DESCRIPTION	QTY	MATERIAL	PLATING & COLOR
F	GROUND	1	STAINLESS STEEL 0.15t	N/A
E	SHELL	1	SPCC 0.4t	Ni 60u" Min OVER Cu 60u"MIN.
D	STOPPER	1	HIGH TEMP.THERMOPLASTIC UL94V-0	BLACK
C	PIN	1	BRASS	GOLD FLASH 1u'' Min.
B	SPRING	1	COPPER ALLOY 0.3t	Sn 60u"Min,Ni 60u"Min.
A	BODY	1	HIGH TEMP.THERMOPLASTIC UL94V-0	BLACK

UNLESS OTHERWISE SPECIFED TOLERANCES

DECIMALS: X :±0.5, X.X :±0.3, X.XX :±0.2

ANGLES: X :±2°, X.X :±1°

Singatron Enterprise Co., Ltd.
信音企業股份有限公司

TITLE	DC POWER JACK			
DWN	HAOLAN	PART NO. 2DC-G213-BA1F		
CHKD	ALLEN	SCALE:4:1	UNIT: mm	
APVD	BOYE	SIZE: A3	SHEET:1 OF 1	REV:A

CUSTOMER COPY

文件編號:RD-06-043-A