REV.	ECN NO OR DESCRIPTION	REVISED	DATE
B	ECN NO: S081005	BOYE	2008.11.24

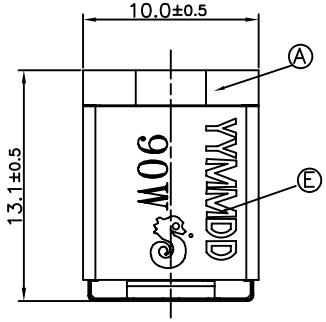

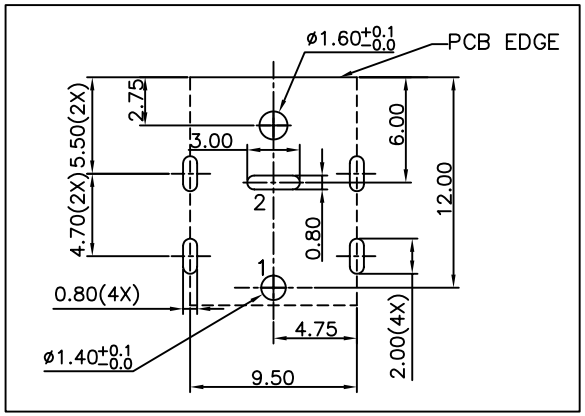

RECOMMENDED P.C.B LAYOUT

TOP VIEW (TOLERANCES:±0.05)

SPECIFICATIONS:

1.RATING: DC 20V 10A 44uF
2.INSERTION FORCE: 3.0Kg MAX.
WITHDRAWAL FORCE:1Kg~3.0Kg
3.INSULATION RESISTANCE BETWEEN ANY ADJACENT TERMINALS SHALL NOT BE LESS THAN 100 MEGOHMS BY 500 VOLTS MEGGER.
4.JACK SHALL WITHSTAND 250 VOLTS BETWEEN ANY ADJACENT TERMINAL FOR ONE MINUTE.
5.CONTACT RESISTANCE (INITIAL) SHALL NOT EXCEED 30mΩ
CONTACT RESISTANCE (AFTER LIFE TEST) SHALL NOT EXCEED 50mΩ
6.MEASURING CONDITION:
TEMPERATURE: FROM 5°C TO 35°C.
RELATIVE HUMIDITY: FROM 40% TO 85%.
7.ENVIRONMENTAL SPECIFICATIONS:
7.1 HUMIDITY TEST: HUMIDITY 90% TO 95% TEMPERATURE 40°C ±2°C FOR 96 HOURS.
7.2 HEAT TEST: TEMPERATURE 70°C ± 2°C (HUMIDITY BELOW 50%) FOR 96 HOURS.
7.3 COLD TEST: TEMPERATURE −40°C ± 2°C FOR 96 HOURS.
8.PACKAGING: TAPE&REEL
9.TO CONFORM TO SINGATRON HAZARDOUS SUBSTANCE FREE SPEC.
10.GREEN PRODUCT IDENTIFICATION MARK ON JACK: △
11.GREEN PRODUCT IDENTIFICATION LABEL ON PACKAGING: G.P. PASS
12.FOR LEAD FREE PROCESS.
13.PRINTED DATE CODE "YYMMDD" ON TOP OF CONNECTOR.
DD: DAY
MM: MONTH
YY: YEAR

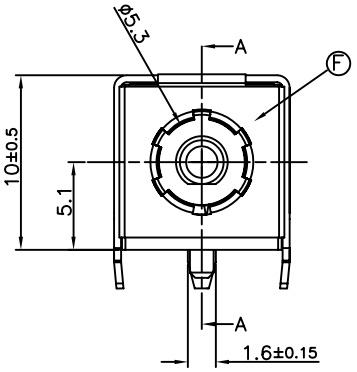

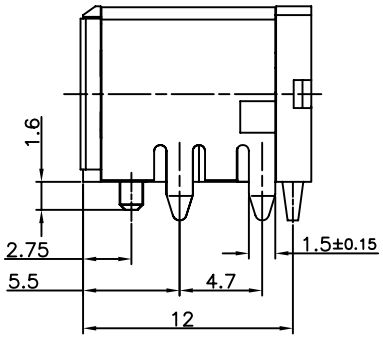

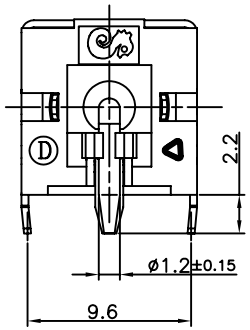

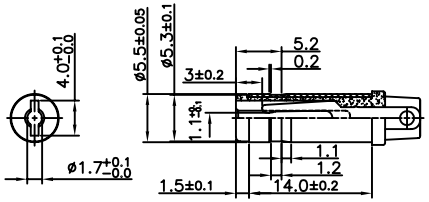

ø5.5PLUG STANDAR TYPE

2.RATING: DC 20V 7A 43uF

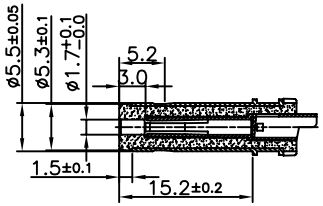

ø5.5PULG TYPE

1.RATING: DC 20V 10A 43uF

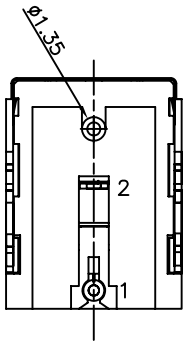

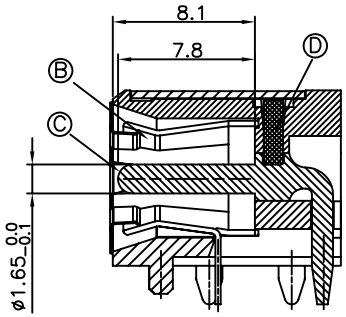

SECTION A–A

SCHEMATIC

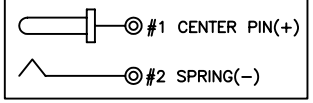

NO	DESCRIPTION	QTY	MATERIAL	PLATING & COLOR
F	GROUND	1	STAINLESS STEEL 0.15t	N/A
E	SHELL	1	COPPER ALLOY 0.4t	Sn(光澤)60u",Ni底60u"
D	STOPPER	1	HIGH TEMP.THERMOPLASTIC UL94V-0	BLACK
C	PIN	1	BRASS BAR	Ag20u"Min Ni底50u"Min
B	SPRING	1	COPPER ALLOY 0.3t	Sn(光澤)60u",Ni底60u"
A	BODY	1	HIGH TEMP. THERMOPLASTIC UL 94V-0	BLUE (PANTONE NO.298C)

UNLESS OTHERWISE SPECIFED TOLERANCES

DECIMALS: X :±0.5, X.X :±0.3, X.XX :±0.2

ANGLES: X :±2°, X.X :±1°

Singatron Enterprise Co., Ltd.
信音企業股份有限公司

TITLE	DC POWER JACK		
DWN	BOYE 2008.11.24	PART NO.2DC-G213-I44	
CHKD	Quan-Zhou 2008.11.26	SCALE:4:1	UNIT: mm
APVD	Max	SIZE: A3	SHEET:1 OF 1 REV: B

CUSTOMER COPY

文件編號:RD-06-043-A