REV.	ECN NO OR DESCRIPTION	REVISED	DATE
A	PRODUCT RELEASE	BILL	2010.10.13
B	ECN:C110345-4 MODIFY DIMENSION	Haijin	2012.01.04

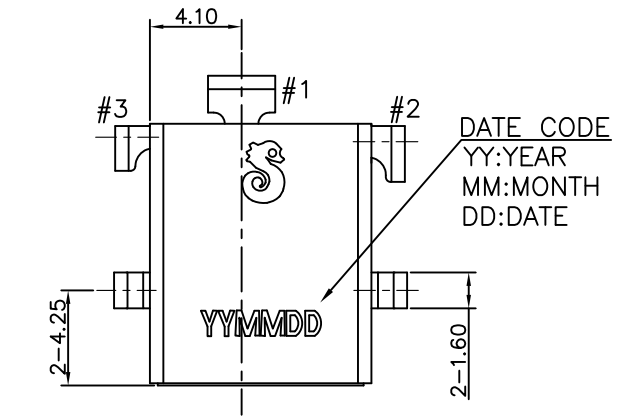

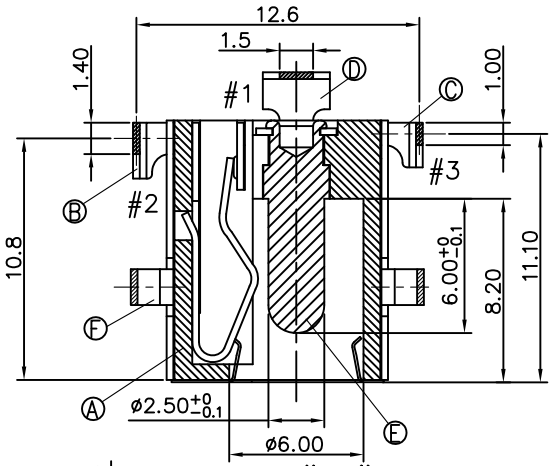

SECTION"A-A"

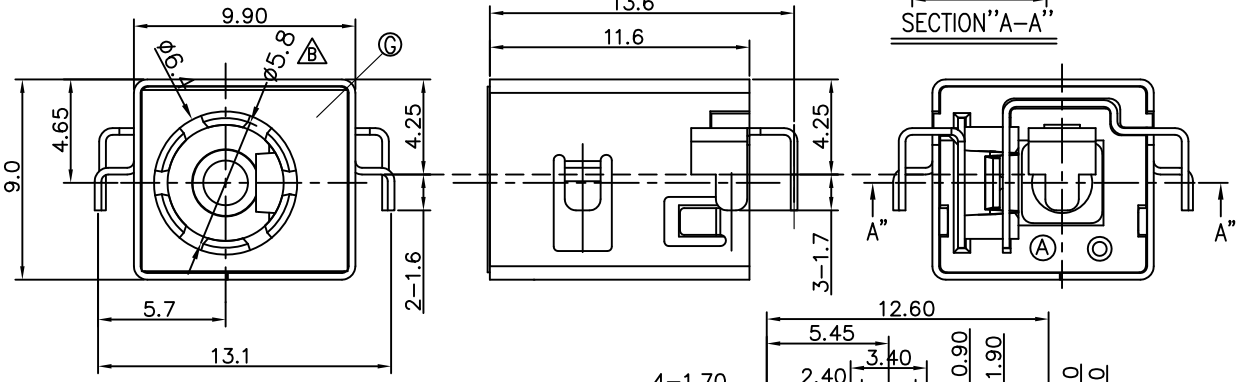

SPECIFICATIONS:

1. ELECTRICAL CHARACTERISTICS:
   1-1. RATING: 20V, 5.5A
   1-2. CONTACT RESISTANCE:
   30 MILLIOHMS Max. FOR INITIAL,
   50 MILLIOHMS Max. AFTER 5000 CYCLES.
   1-3. INSULATION RESISTANCE: 100 MEGAOHMS Min. BY 500V DC AFTER 1 MINUTE.
   1-4. DIELECTRIC WITHSTANDING VOLTAGE: 500V RMS AFTER 1 MINUTE.
2. MECHANICAL CHARACTERISTICS:
   2-1. INSERTION FORCE : 0.4~3.0 KGF
   2-2. WITHDRAWAL FORCE : 0.4~3.0 KGF
3. LIFE TEST: 5,000 CYCLES MIN.
4. OTHER GENERAL SPEC. TO REFER "2DC-G328 SERIES SPEC".
5. TO CONFORM TO SINGATRON HAZARDOUS SUBSTANCE FREE SPEC.
6. HALOGEN FREE PRODUCT IDENTIFICATION MARK ON JACK: ◎
7. HALOGEN FREE PRODUCT IDENTIFICATION LABEL ON PACKAGING:
8. PACKAGING: TAPE & REEL.

SCHEMATIC

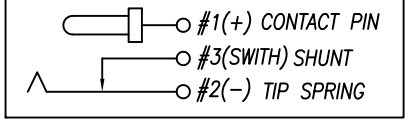

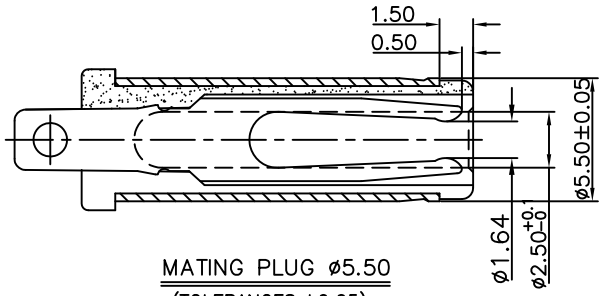

MATING PLUG ø5.50
(TOLERANCES:±0.05)

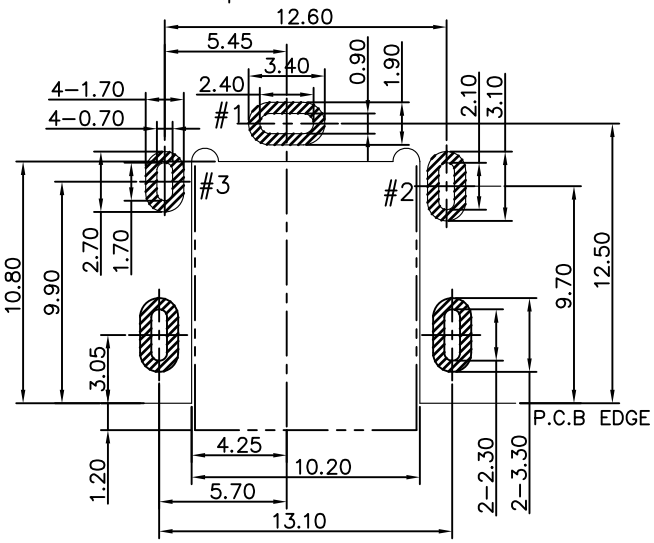

RECOMMENDED P.C.B LAYOUT
TOP VIEW Tolerance:±0.05

NO	DESCRIPTION	QTY	MATERIAL	PLATING & COLOR
G	GROUNDING	1	SUS 0.1T	N/A
F	SHIELDING	1	SPCC 0.3t	NICKEL PLATING
E	CONTACT PIN	1	BRASS ø2.5	NICKEL PLATING
D	TERMINAL	1	COPPER ALLOY 0.3t	SILVER PLATING
C	SHUNT	1	BRASS 0.3t	SILVER PLATING
B	TIP SPRING	1	COPPER ALLOY 0.3t	SILVER PLATING
A	BODY	1	NYLON-10T+30%GF	BLACK COLOR

UNLESS OTHERWISE SPECIFED TOLERANCES

DECIMALS: X :±0.5, X.X :±0.3, X.XX :±0.2
ANGLES: X :±2°, X.X :±1°

Singatron Enterprise Co., Ltd.
信音企業股份有限公司

TITLE	DC POWER JACK		
DWN	HAIJIN 2012.01.04	PART NO. 2DC-G328-B10	
CHKD	ZJZ 2012.01.04	SCALE 4:1	UNIT: mm
APVD	LIAO 2012.01.04	SIZE: A3	SHEET: 1 OF 1 REV: B

CUSTOMER COPY

文件編號 RD-06-043-A