REV.	ECN NO OR DESCRIPTION	REVISED	DATE
B	ECN NO. T070018	DA	2007.02.01
C	ECN NO. S080605	SWINA	2008.07.01
D	ECN NO. S090203	LILI	2009.04.15

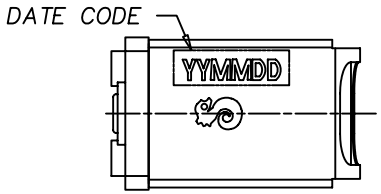

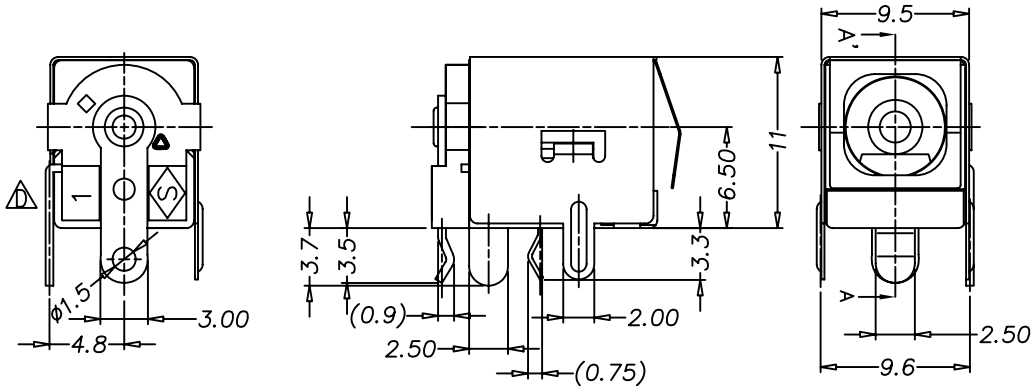

SPECIFICATIONS:

1. RATING: DC 16V 3A
2. INSERTION FORCE: 2.5KG MAX.
   WITHDRAWAL FORCE: 0.4KG–2.5KG
3. INSULATION RESISTANCE BETWEEN ANY ADJACENT TERMINALS SHALL NOT BE LESS THAN 100 MEGOHMS BY 500 VOLTS MEGGER.
4. JACK SHALL WITHSTAND 250 VOLTS BETWEEN ANY ADJACENT TERMINAL FOR ONE MINUTE.
5. CONTACT RESISTANCE SHALL NOT EXCEED 0.03 OHMS.
6. JACK SHALL WITHSTAND 5,000 CYCLES OF INSERTION AND WITHDRAWAL WITH TESTING PLUG,AND CONTACT RESISTANCE SHALL NOT EXCEED 0.1 OHMS.
7. MEASURING CONDITION:
   TEMPERATURE: FROM 5°C TO 35°C.
   RELATIVE HUMIDITY: FROM 40% TO 85%.
8. ENVIRONMENTAL SPECIFICATIONS:
   8.1 HUMIDITY TEST: HUMIDITY 90% TO 95% TEMPERATURE 40°C ± 2°C FOR 96 HOURS.
   8.2 HEAT TEST: TEMPERATURE 70°C ± 2°C (HUMIDITY BELOW 50%) FOR 96 HOURS.
   8.3 COLD TEST: TEMPERATURE –40°C ± 2°C FOR 96 HOURS.
9. TO CONFORM TO SINGATRON HAZARDOUS SUBSTANCE FREE SPEC
10. GREEN PRODUCT IDENTIFICATION MARK ON JACK:
11. GREEN PRODUCT IDENTIFICATION LABEL ON PACKAGING: G.P. PASS
12. FOR WAVE SOLDERING LEAD–FREE PROCESS.
13. PRINTED DATE CODE" YYMMDD " ON TOP OF CONNECTOR.

DATE CODE: YYMMDD
- DD: DAY
- MM: MONTH
- YY: YEAR

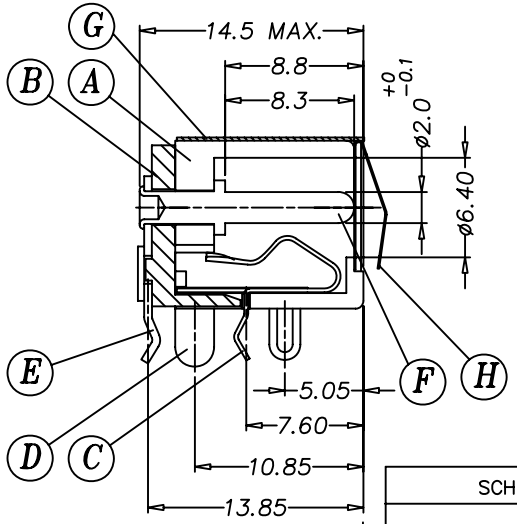

A–A' SECTION

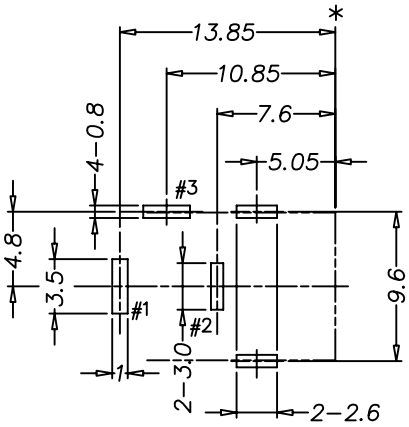

PC BOARD LAYOUT (TOLERANCE ±0.05)

(TOP VIEW)

SCHEMATIC

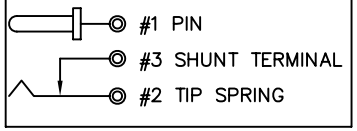

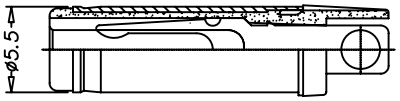

MATEING PLUG

NO	DESCRIPTION	QTY	MATERIAL	PLATING & COLOR
H	GROUND	1	SUS 304 0.1t	N/A
G	SHIELDING PLATE	1	BRASS 0.2t	Ni60u"Min
F	PIN	1	BRASS BAR	Ni60u"Min,Cu 80u"Min
E	TERMINAL	1	BRASS STRIP 0.5t	Ag20u"Min,Ni 20u"Min
D	SHUNT TERMINAL	1	BRASS STRIP 0.5t	Ag20u"Min,Ni 20u"Min
C	TIP SPRING	1	PHOSPHOR BRONZE 0.25t	Ag20u"Min,Ni 20u"Min
B	COVER	1	HIGHT TEMP.THERMDPLASTIC UL94V-0	BLACK
A	BODY	1	HIGHT TEMP.THERMDPLASTIC UL94V-0	BLACK

UNLESS OTHERWISE SPECIFED TOLERANCES

DECIMALS: X :±0.5, X.X :±0.3, X.XX :±0.2

ANGLES: X :±2°, X.X :±1°

Singatron Enterprise Co., Ltd.
信音企業股份有限公司

TITLE	DC POWER JACK		
DWN	LILI	PART NO.	2DC-G505-D01
CHKD	BOYE	SCALE: 3:1	UNIT: mm
APVD	MAX	SIZE: A3	SHEET: 1 OF 1 REV: D

CUSTOMER COPY

文件編號 RD-06-043-A