REV.	ECN NO. OR DESCRIPTION	REVISED	DATE
B	ECN NO.S071008	Yolanda	2007.10.15
C	ECN NO.S080101	Quan-Zhou	2008.01.25
D	ECN NO.S080605	Swina	2008.07.03

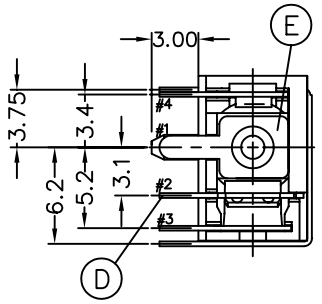

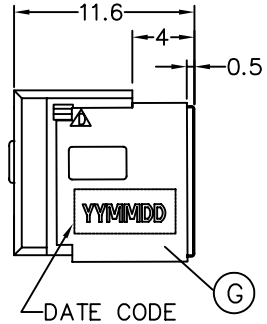

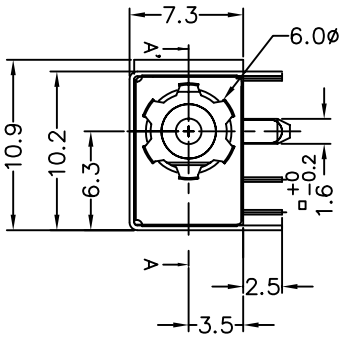

SPECIFICATIONS:
1.RATING: DC 20V 7A
2.INSERTION FORCE: 0.4KG–3.0KG
WITHDRAWAL FORCE: 0.4KG–3.0KG
3.INSULATION RESISTANCE BETWEEN ANY ADJACENT TERMINALS SHALL NOT BE LESS THAN 100 MEGOHMS BY 500 VOLTS MEGGER.
4.JACK SHALL WITHSTAND 250 VOLTS BETWEEN ANY ADJACENT TERMINAL FOR ONE MINUTE.
5.CONTACT RESISTANCE SHALL NOT EXCEED 0.03 Ω
6.JACK SHALL WITHSTAND 5,000 CYCLES OF INSERTION AND WITHDRAWAL WITH TESTING PLUG,AND CONTACT RESISTANCE SHALL NOT EXCEED 0.1 Ω
7.MEASURING CONDITION:
TEMPERATURE: FROM 5°C TO 35°C.
RELATIVE HUMIDITY: FROM 40% TO 85%
8.ENVIRONMENTAL SPECIFICATIONS:
8.1 HUMIDITY TEST: HUMIDITY 90% TO 95% TEMPERATURE 40°C ± 2°C FOR 96 HOURS.
8.2 HEAT TEST: TEMPERATURE 70°C ± 2°C (HUMIDITY BELOW 50%) FOR 96 HOURS.
8.3 COLD TEST: TEMPERATURE −40°C ± 2°C FOR 96 HOURS.
9.SOLDERABILITY TEST: THE TERMINATION IS AT LEAST 95% COVERED BY A CONTINUOUS NEW SOLDER COATING.
TEST CONDITION: DIP IN MOLTEN SOLDER FOR 5 Sec. AT 245±5°C
(TERMINATION SHALL BE IMMERSED IN FLUX BEFORE TEST)
10.PACKAGING: TAPPE&REEL
11.TO CONFORM TO SINGATRON HAZARDOUS SUBSTANCE FREE SPEC.
12.GREEN PRODUCT IDENTIFICATION MARK ON JACK:
13.GREEN PRODUCT IDENTIFICATION LABEL ON PACKAGING: G.P. PASS
14.FOR LEAD–FREE PROCESS.
15.SOLDER HEAT RESISTANCE: 260°C 10 SECS .

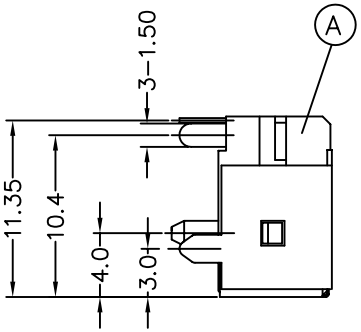

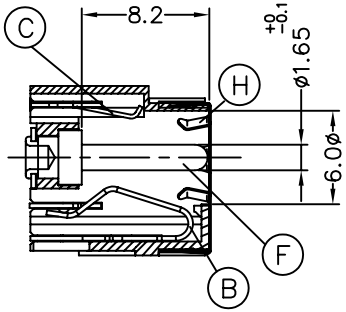

A–A' SECTION

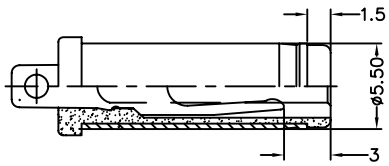

MATE PLUG ø5.50

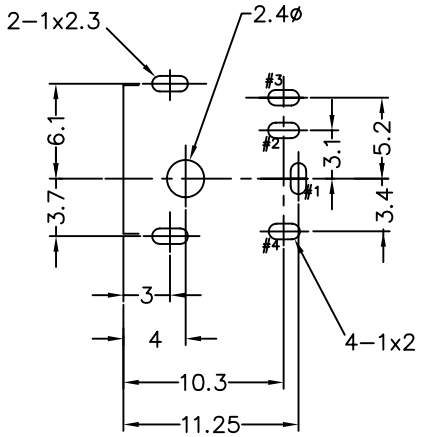

RECOMMENDED P.C.B LAYOUT
TOP VIEW(TOL.±0.05)

SCHEMATIC

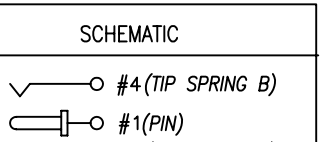

NO	DESCRIPTION	QTY	MATERIAL	PLATING & COLOR
H	GROUNDING SPRING	1	STAINLESS 0.1t	N/A
G	SHIELDING	1	BRASS STRIP 0.3t	Ni 60u" Min.
F	PIN	1	BRASS BAR	Ni 60u"Min,Cu 80u"Min
E	TERMINAL	1	BRASS STRIP 0.3t	Ag 20u"Min,Ni 20u"Min
D	SHUNT TERMINAL	1	BRASS STRIP 0.3t	Ag 20u"Min,Ni 20u"Min
C	TIP SPRING B	1	COPPER ALLOY 0.25t	Ag 20u"Min,Ni 20u"Min
B	TIP SPRING A	1	COPPER ALLOY 0.3t	Ag 0.5umMin,Ni/Cu1.5umMin
A	BODY	1	HIGH TEMP. THERMOPLASTIC UL 94V-0	BLACK COLOR

UNLESS OTHERWISE SPECIFED TOLERANCES

DECIMALS: X :±0.5, X.X :±0.3, X.XX :±0.2
ANGLES: X :±2°, X.X :±1°

Singatron Enterprise Co., Ltd.
信音企業股份有限公司

TITLE	DC POWER JACK		
DWN	Swina 2008.07.03	PART NO. 2DC-G726-I02	
CHKD	Sandy 2008.07.04	SCALE:3/1	UNIT: mm
APVD	Max 2008.07.04	SIZE: A3	SHEET:1 OF 1 REV: D

CUSTOMER COPY

文件編號:RD-06-035-1A