REV.	ECN NO OR DESCRIPTION	REVISED	DATE
A	PDR NO.:T101217-2A	Billy	2011.02.14
B	ECN NO.:S110816	ANDY	2011.08.29
C	ECN NO.:S120441	SEAN	2012.07.13

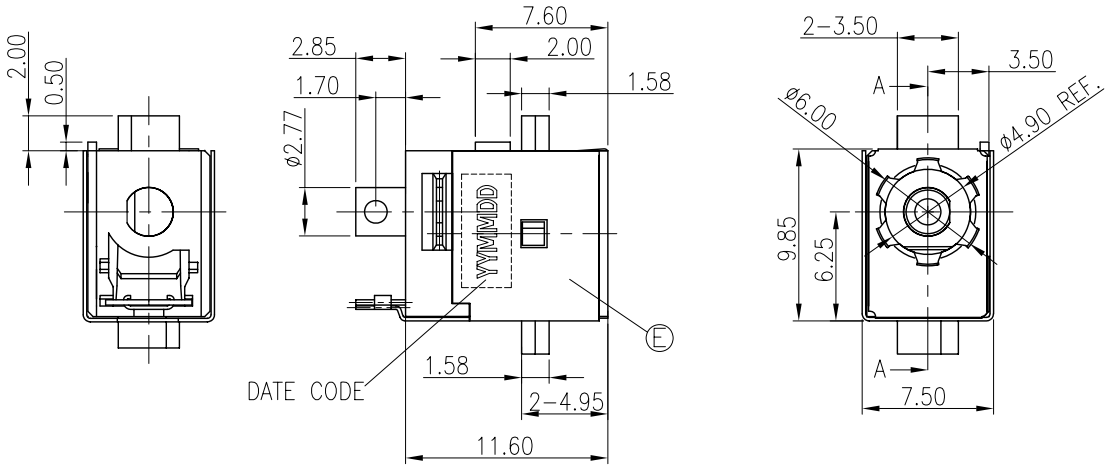

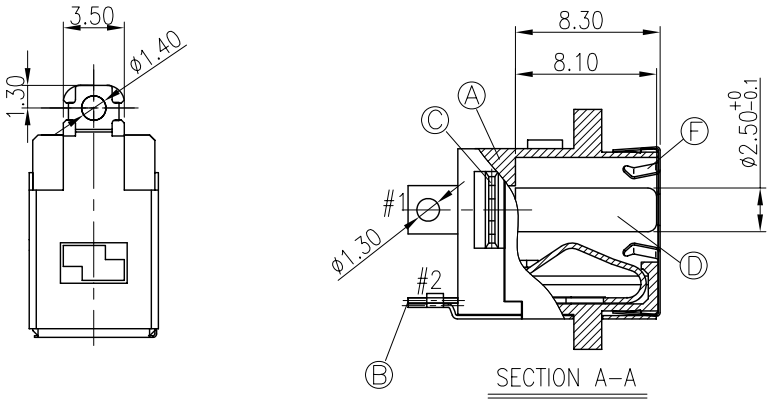

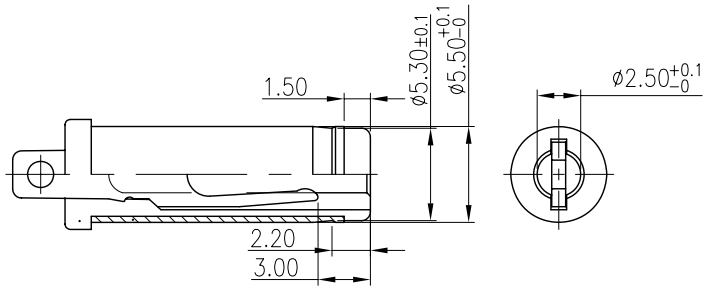

MATING PLUG

TOLERANCES:±0.10

SPECIFICATIONS:

1. ELECTRICAL CHARACTERISTICS:
   1-1. RATING: DC 20V 7A
   1-2. CONTACT RESISTANCE: 30mΩ MAX.(INITIAL)
   1-3. DIELECTRIC WITHSTANDING VOLTAGE: 500V AC FOR ONE MINUTE.
   1-4. INSULATION RESISTANCE: 100MΩ MIN. MEASURED BY 500 VDC
2. MECHANICAL CHARACTERISTICS:
   2-1. INSERTION FORCE :1.0-3.0KGF
   2-2. WITHDRAWAL FORCE :1.0-3.0KGF
3. LIFE TEST: 5,000 CYCLES MIN.
4. OTHER GENERAL SPEC. TO REFER "2DC-G756 SERIES SPEC".
5. TO CONFORM TO SINGATRON HAZARDOUS SUBSTANCE FREE SPEC.
6. HALOGEN FREE PRODUCT IDENTIFICATION MARK ON PRODUCT:
7. HALOGEN FREE PRODUCT IDENTIFICATION LABEL ON PACKAGING:
8. FOR HAND SOLDERING LEAD-FREE PROCESS.
9. PRINTED DATE CODE" YYMMDD" ON TOP OF CONNECTOR.
   - DD: DAY
   - MM: MONTH
   - YY: YEAR

NO	DESCRIPTION	QTY	MATERIAL	PLATING & COLOR
F	GROUND	1	STAINLESS 0.1T	N/A
E	SHIELDING	1	BRASS STRIP 0.2T	Ni 60u"
D	PIN(+)	1	BRASS	腰Ni 60u" Min
C	TERMINAL	1	STAINLESS 0.3T	N/A
B	TIP SPRING(-)	1	COPPER ALLOY 0.3T	Ag 20u" OVER Ni 50u"
A	BODY	1	HIGH THERMOPLASTIC TEMP. UL 94V-0	BLACK

SCHEMATIC

#1 PIN(+)

#2 TIP SPRING(-)

UNLESS OTHERWISE SPECIFED TOLERANCES

DECIMALS: X :±0.5, X.X :±0.3, X.XX :±0.2

ANGLES: X :±2°, X.X :±1°

Singatron Enterprise Co., Ltd.
信音企業股份有限公司

TITLE	DC POWER JACK			
DWN	SEAN	PART NO.2DC-G756-BB2F		
CHKD	TOM	SCALE: 4:1	UNIT: mm	
APVD	QUAN	SIZE: A3	SHEET: 1 OF 1	REV: C

CUSTOMER COPY

文件編號:RD-06-043-A