REV.	ECN NO. OR DESCRIPTION	REVISED	DATE
A	ECN NO.T090047	ANGEL	2009.10.07
B	MODIFYCAION DRAWING ECN NO:C100271	LONGJIANG	2010.7.15
C	ECN NO.S100837	Swina	2010.09.01

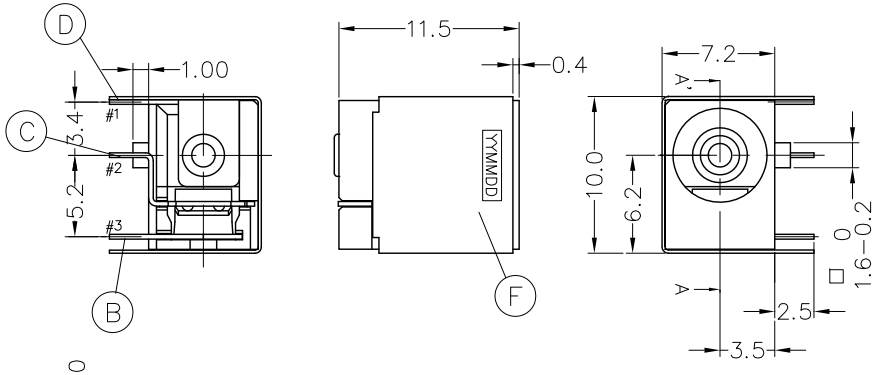

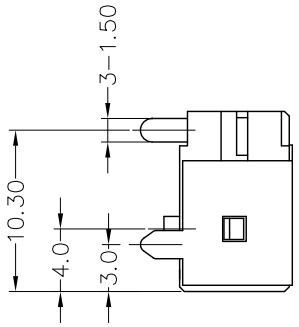

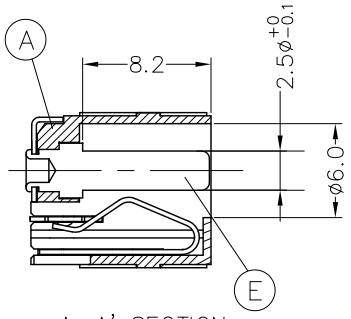

A−A' SECTION

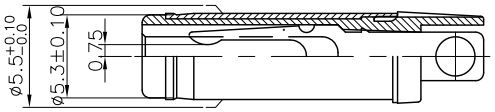

P/N:2DP−5525−AH2

MATING PLUG(REF ONLY)

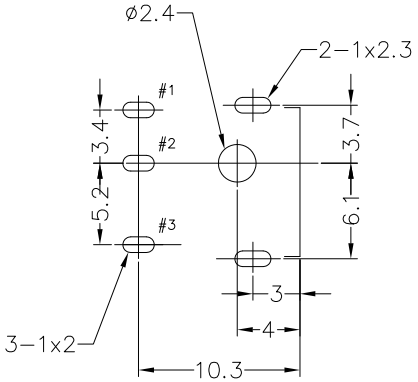

RECOMMENDED P.C.B(T:1.2mm) LAYOUT

TOP VIEW(TOLERANCE ±0.05mm)

SCHEMATIC

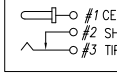

SPECIFICATIONS:

1. RATING: DC 20V 4A
2. LOAD SIDE CAPACITANCE: 4.7μF*4 MIN.
3. INSERTION FORCE: 0.4KG−3.0KG
   WITHDRAWAL FORCE: 0.4KG−3.0KG
4. INSULATION RESISTANCE BETWEEN ANY ADJACENT TERMINALS SHALL NOT BE LESS THAN 100 M ΩBY 500 VOLTS MEGGER.
5. JACK SHALL WITHSTAND 250 VOLTS BETWEEN ANY ADJACENT TERMINAL FOR ONE MINUTE.
6. CONTACT RESISTANCE SHALL NOT EXCEED 30 mΩ.
7. JACK SHALL WITHSTAND 5,000 CYCLES OF INSERTION AND WITHDRAWAL WITH TESTING PLUG,AND CONTACT RESISTANCE SHALL NOT EXCEED 100 mΩ
8. MEASURING CONDITION:
   TEMPERATURE: FROM 5°C TO 35°C.
   RELATIVE HUMIDITY: FROM 40% TO 85%
9. ENVIRONMENTAL SPECIFICATIONS:
   9.1 HUMIDITY TEST: HUMIDITY 90% TO 95% TEMPERATURE 40°C ± 2°C FOR 96 HOURS.
   9.2 HEAT TEST: TEMPERATURE 70°C ± 2°C (HUMIDITY BELOW 50%) FOR 96 HOURS.
   9.3 COLD TEST: TEMPERATURE −40°C ± 2°C FOR 96 HOURS.
10. SOLDERABILITY TEST: THE TERMINATION IS AT LEAST 95% COVERED BY A CONTINUOUS NEW SOLDER COATING.
    TEST CONDITION: DIP IN MOLTEN SOLDER FOR 5 Sec. AT 245±5°C (TERMINATION SHALL BE IMMERSED IN FLUX BEFORE TEST)
11. PACKAGING: TAPE & REEL.
12. TO CONFORM TO SINGATRON HARADOUS SUBSTANCE FREE SPEC
13. GREEN PRODUCT IDENTIFICATION MARK ON JACK: △
14. GREEN PRODUCT IDENTIFICATION LABELON PACKAGING: **G.P. PASS**
15. FOR LEAD−FREE PROCESS.
16. DATE CODE DESCRIPTION: YYMMDD
    DAY
    MONTH
    YEAR

NO	DESCRIPTION	QTY	MATERIAL	PLATING & COLOR
F	SHIELDING	1	BRASS STRIP 0.2t	Ni 60u"MIN
E	PIN	1	BRASS BAR	Ni 60u"MIN
D	TERMINAL	1	BRASS STRIP 0.3t	Ni 60u"MIN
C	SHUNT TERMINAL	1	BRASS STRIP 0.3t	Ag 20u"MIN Over Ni 50u"MIN
B	TIP SPRING	1	YCUTM−H 0.3T	Ag 20u"MIN Over Ni 50u"MIN
A	BODY	1	HIGH TEMP. THERMOPLASTIC UL 94V−0	BLACK

UNLESS OTHERWISE SPECIFED TOLERANCES

DECIMALS: x :±0.5, X.X :±0.3, X.XX :±0.2

ANGLES: X :±2°, X.X :±1°

Singatron Enterprise Co., Ltd.
信音企業股份有限公司

TITLE	DC POWER JACK		
DWN	Swina 2010.09.0	PART NO. 2DC−S026−B01	
CHKD	Lussen 2010.09.03	SCALE:3:1	UNIT: MM
APVD	Tony 2010.09.03	SIZE: A3	SHEET:1 OF 1 REV: C

CUSTOMER COPY

文件編號 RD−06−043−A