REV.	ECN NO OR DESCRIPTION	REVISED	DATE
A	PDR NO: T101123-1A	Spring	2011.1.5

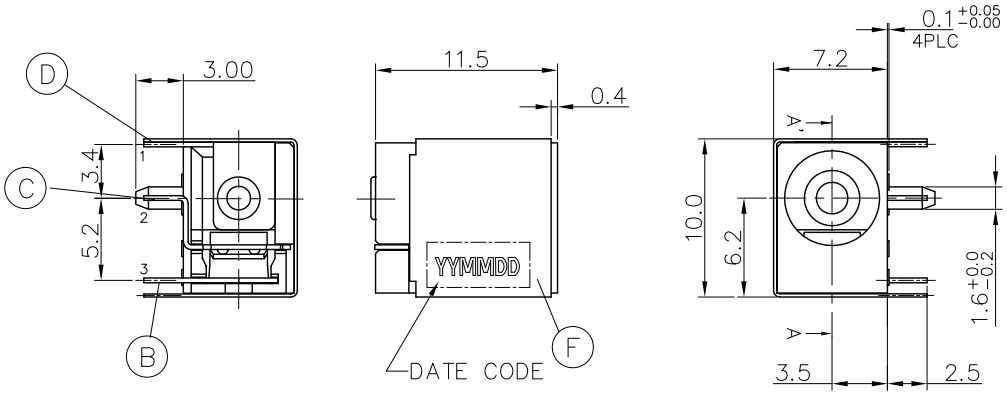

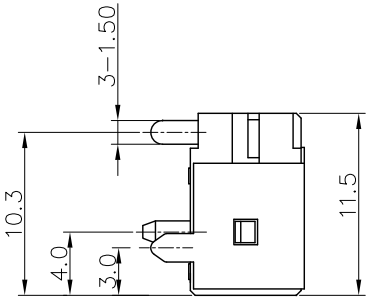

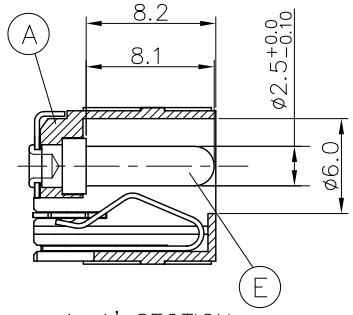

A−A' SECTION

SPECIFICATIONS:

1. ELECTRICAL CHARACTERISTICS:
   1−1. RATING: 20V 5A
   1−2. CONTACT RESISTANCE: 30mΩ MAX.(INITIAL)
   1−3. DIELECTRIC WITHSTANDING VOLTAGE: 250V AC FOR ONE MINUTE.
   1−4. INSULATION RESISTANCE: 100MΩ MIN. MEASURED BY 500 VDC
2. MECHANICAL CHARACTERISTICS:
   2−1. INSERTION FORCE : 0.4~3.0 KGF
   2−2. WITHDRAWAL FORCE : 0.4~3.0 KGF
3. LIFE TEST: 5,000 CYCLES MIN.
   AFTER LIFE TEST, CONTACT RESISTANCE: 100mΩ MAX.
4. OTHER GENERAL SPEC. TO REFER "DC POWER JACK SERIES SPEC".
5. TO CONFORM TO SINGATRON HAZARDOUS SUBSTANCE FREE SPEC
6. HALOGEN FREE PRODUCT IDENTIFICATION MARK ON PRODUCT:
7. HALOGEN FREE PRODUCT IDENTIFICATION LOGO ON PACKAGING:
8. FOR REFLOW SOLDERING LEAD−FREE PROCESS.
9. PACKAGING: TAPE & REEL.

SCHEMATIC

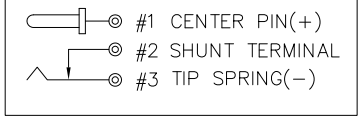

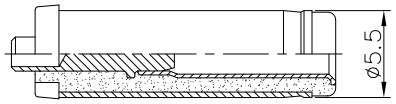

MATING PLUG

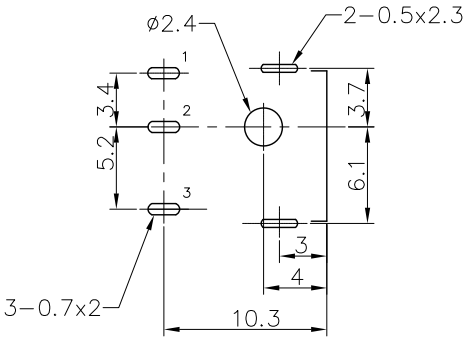

RECOMMENDED P.C.B LAYOUT(THICKNESS=1.6)
TOP VIEW (TOLERANCE ±0.05)

NO	DESCRIPTION	QTY	MATERIAL	PLATING & COLOR
F	SHIELDING	1	BRASS STRIP 0.2t	Ni 60uin Min.
E	PIN	1	BRASS BAR	Ni 60uin Min.
D	TERMINAL	1	BRASS STRIP 0.3t	Ni 60uin Min.
C	SHUNT TERMINAL	1	BRASS STRIP 0.3t	Ag 20uin Min all over Nickel plating 20uin MIN.
B	TIP SPRING	1	YCUTM−H 0.3T	
A	BODY	1	HIGH TEMP. THERMOPLASTIC UL 94V−0	BLACK COLOR

UNLESS OTHERWISE SPECIFED TOLERANCES

DECIMALS: X :±0.5, X.X :±0.3, X.XX :±0.2
ANGLES: X :±2°, X.X :±1°

Singatron Enterprise Co., Ltd.
信音企業股份有限公司

TITLE	DC POWER JACK			
DWN	Spring 2011.1.5	PART NO. 2DC−S026−B20F		
CHKD	BOYE	SCALE:N/A	UNIT: mm	
APVD	QUAN	SIZE: A3	SHEET: 1 OF 1	REV: A

CUSTOMER COPY

文件編號 RD−06−043−A