REV.	ECN NO OR DESCRIPTION	REVISED	DATE
A	ECN NO.:C140271 SEPARATE DRAWING MODIFY RATED CURRENT'S SPEC	KERMIT	2014.12.03

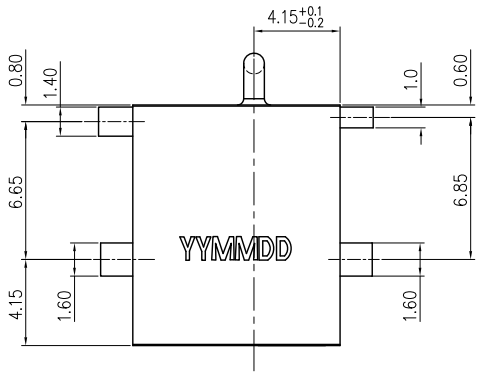

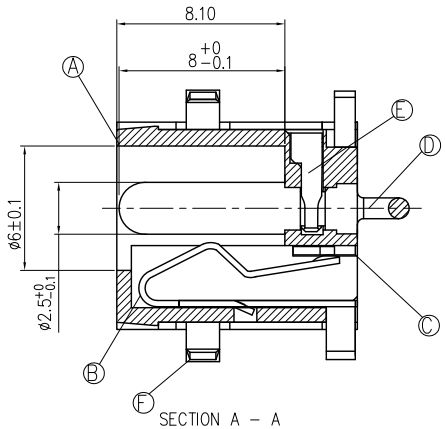

SECTION A – A

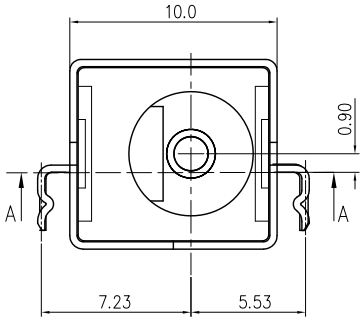

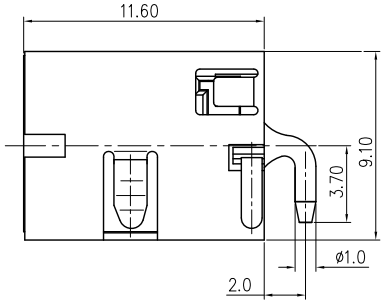

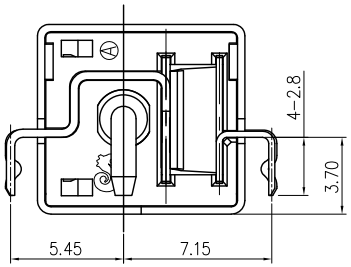

SPECIFICATIONS:
1.RATING: DC 20V 10A.
2.INSERTION FORCE: 2.5Kg MAX.
WITHDRAWAL FORCE: 1.0Kg~2.5Kg
3.INSULATION RESISTANCE BETWEEN ANY ADJACENT TERMINALS SHALL NOT BE LESS THAN 100 MEGOHMS BY 500V DC.
4.JACK SHALL WITHSTAND 500 VOLTS BETWEEN ANY ADJACENT TERMINAL FOR ONE MINUTE.
5.CONTACT RESISTANCE SHALL NOT EXCEED 0.03 OHMS.
6.JACK SHALL WITHSTAND 5,000 CYCLES OF INSERTION AND WITHDRAWAL WITH TESTING PLUG, AND CONTACT RESISTANCE SHALL NOT EXCEED 0.06 OHMS.
7.MEASURING CONDITION:
TEMPERATURE: FROM 5°C TO 35°C.
RELATIVE HUMIDITY: FROM 40% TO 85%.
8.TO CONFORM TO SINGATRON HAZARDOUS SUBSTANCE FREE SPEC.
9.GREEN PRODUCT IDENTIFICATION MARK ON JACK:
10.GREEN PRODUCT IDENTIFICATION LABEL ON PACKAGING: G.P. PASS
11. FOR 260°C 10SEC. WAVE SOLDERING LEAD-FREE PRODUCT.
12.PACKAGING: TAPE & REEL.
13.PRINTED DATE CODE"YYMMDD"ON TOP OF CONNECTOR.

SCHEMATIC

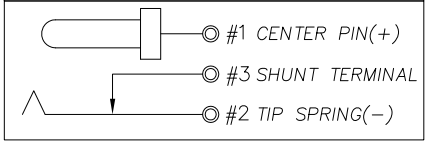

YYMMDD
DD: DAY
MM: MONTH
YY: YEAR

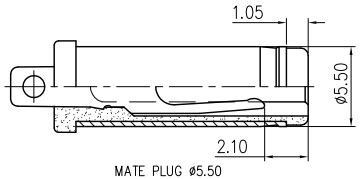

MATE PLUG ø5.50

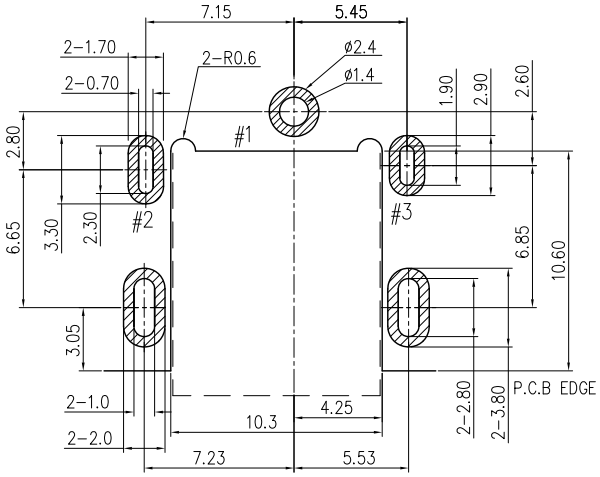

RECOMMENDED P.C.B LAYOUT
TOP VIEW(TOLERANCES: ±0.05)

NO	DESCRIPTION	QTY	MATERIAL	PLATING & COLOR
F	SHIELD	1	BRASS 0.35t	Ni 60u" Min.(SOLDERABILITY)
E	TERMINAL	1	HIGHT TEMP.THERMOPLASTIC UL94V-0	BLACK COLOR
D	CONTACT PIN	1	BRASS BAR	Ag20u "MIN,Ni20u"MIN
C	SHUNT TERMINAL	1	BRASS 0.4t	Ag20u "MIN,Ni20u"MIN
B	TIP SPRING	1	COPPER ALLOY 0.3t	Ag20u "MIN,Ni20u"MIN
A	BODY	1	HIGHT TEMP.THERMOPLASTIC UL94V-0	YELLOW COLOR(123C)

UNLESS OTHERWISE SPECIFED TOLERANCES

DECIMALS: X :±0.5, X.X :±0.3, X.XX :±0.2
ANGLES: X :±2°, X.X :±1°

Singatron Enterprise Co., Ltd.
信音企業股份有限公司

TITLE	DC POWER JACK			
DWN	Kermit 14/12/09	PART NO. 2DC-S028-B01		
CHKD	BILLY 14/12/09	SCALE 4:1	UNIT: mm	
APVD	ZJZ 14/12/09	SIZE: A3	SHEET: 1OF1	REV: A

CUSTOMER COPY

文件編號RD-06-043-A