REV.	ECN NO OR DESCRIPTION	REVISED	DATE
J	ECN NO.: C100044	REX	2010.07.27
K	ECN NO.: C130022 MODIFY BODY&PIN	ZLS	2013.07.02
L	ECN: C140262 MODIFY DRAWING	CHEN	2014.12.03

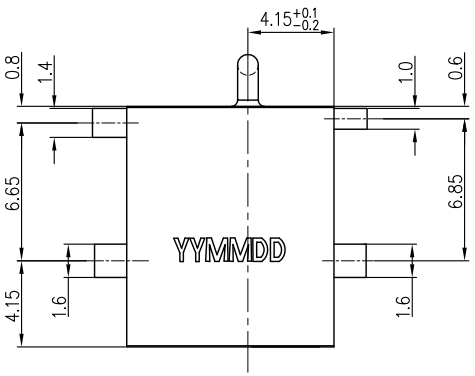

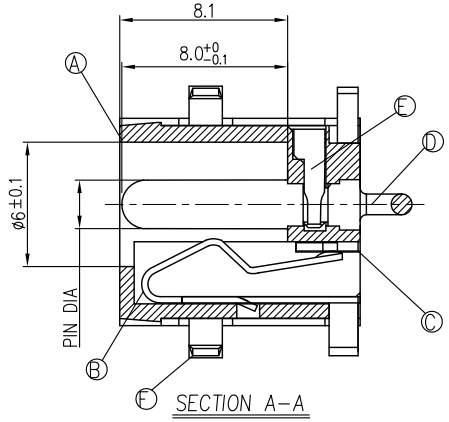

SECTION A-A

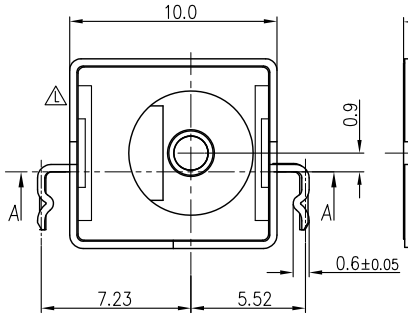

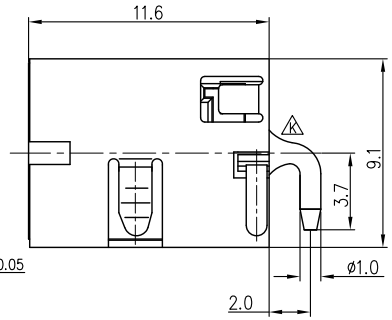

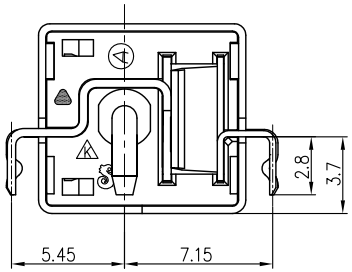

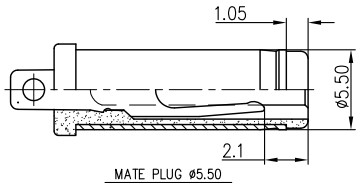

MATE PLUG ø5.50

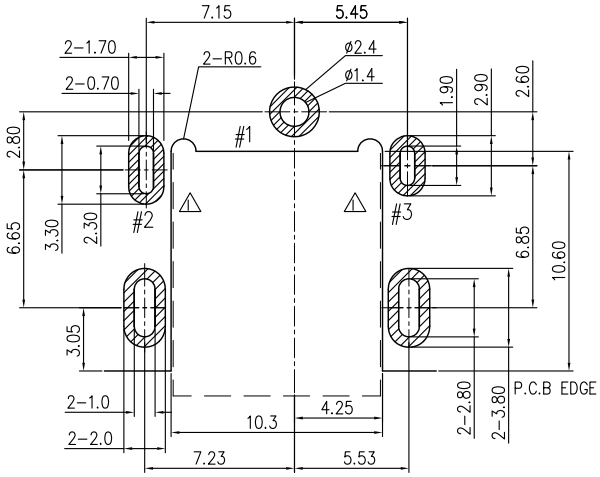

RECOMMENDED P.C.B LAYOUT

TOP VIEW(TOLERANCES: ±0.05)

SPECIFICATIONS:

1. RATING: DC 20V 5.5A
2. INSERTION FORCE: 2.5Kg MAX.
   WITHDRAWAL FORCE: 1.0Kg~2.5Kg
3. INSULATION RESISTANCE BETWEEN ANY ADJACENT TERMINALS SHALL NOT BE LESS THAN 100 MEGOHMS BY 500V DC.
4. JACK SHALL WITHSTAND 500 VOLTS BETWEEN ANY ADJACENT TERMINAL FOR ONE MINUTE.
5. CONTACT RESISTANCE SHALL NOT EXCEED 0.03 OHMS.
6. JACK SHALL WITHSTAND 5,000 CYCLES OF INSERTION AND WITHDRAWAL WITH TESTING PLUG, AND CONTACT RESISTANCE SHALL NOT EXCEED 0.06 OHMS.
7. MEASURING CONDITION:
   TEMPERATURE: FROM 5°C TO 35°C.
   RELATIVE HUMIDITY: FROM 40% TO 85%.
8. PACKAGING: TAPE&REEL
9. PRINTED DATE CODE"YYMMDD"ON TOP OF CONNECTOR.
10. TO CONFORM TO SINGATRON HAZARDOUS SUBSTANCE FREE SPEC.
11. GREEN PRODUCT IDENTIFICATION MARK ON JACK:
12. GREEN PRODUCT IDENTIFICATION LABEL ON PACKAGING: **G.P. PASS**
13. FOR 260°C 10SEC. WAVE SOLDERING LEAD-FREE PROCESS.

YY MM DD
- DD: DAY
- MM: MONTH
- YY: YEAR

SCHEMATIC

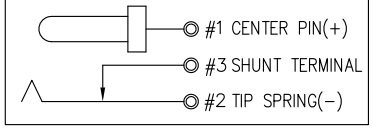

NO	DESCRIPTION	QTY	MATERIAL	PLATING & COLOR
F	SHIELD	1	BRASS 0.35t	Ni 60u" Min.可焊鎳
E	TERMINAL	1	HI-TEMP.TERMOPLASTIC	BLACK COLOR
D	CONTACT PIN	1	BRASS	Ag20u "MIN,Ni20u"MIN
C	SHUNT TERMINAL	1	BRASS 0.4t	Ag20u "MIN,Ni20u"MIN
B	TIP SPRING	1	BRASS 0.3t	Ag20u "MIN,Ni20u"MIN
A	BODY	1	HI-TEMP.TERMOPLASTIC	BLACK COLOR

PART NO. 2DC-S028-X02

"TABLE 1"

PART NO.	PIN DIA.
C	2.35ø+0 −0.1
D	2.0ø+0 −0.1

UNLESS OTHERWISE SPECIFED TOLERANCES

DECIMALS: X : ±0.5, X.X : ±0.3, X.XX : ±0.2

ANGLES: X : ±2°, X.X : ±1°

Singatron Enterprise Co., Ltd.
信音企業股份有限公司

TITLE	DC POWER JACK		
DWN	CaoChen 14/12/09	PART NO. 2DC-S028-X02	
CHKD	BILLY 14/12/09	SCALE 4:1	UNIT: mm
APVD	ZJZ 14/12/09	SIZE: A3	SHEET: 1OF1	REV: L

CUSTOMER COPY

文件編號RD-06-043-A