REV.	ECN NO OR DESCRIPTION	REVISED	DATE
C	ECN NO.S110302	Swina	2011.03.01
D	ECN NO.S111139	SpringWang	2012.03.20
E	ECN NO.S140217	SpringWang	2014.02.17
F	ECN NO.S202104-R03 (F)	Qizhen	2021.05.06

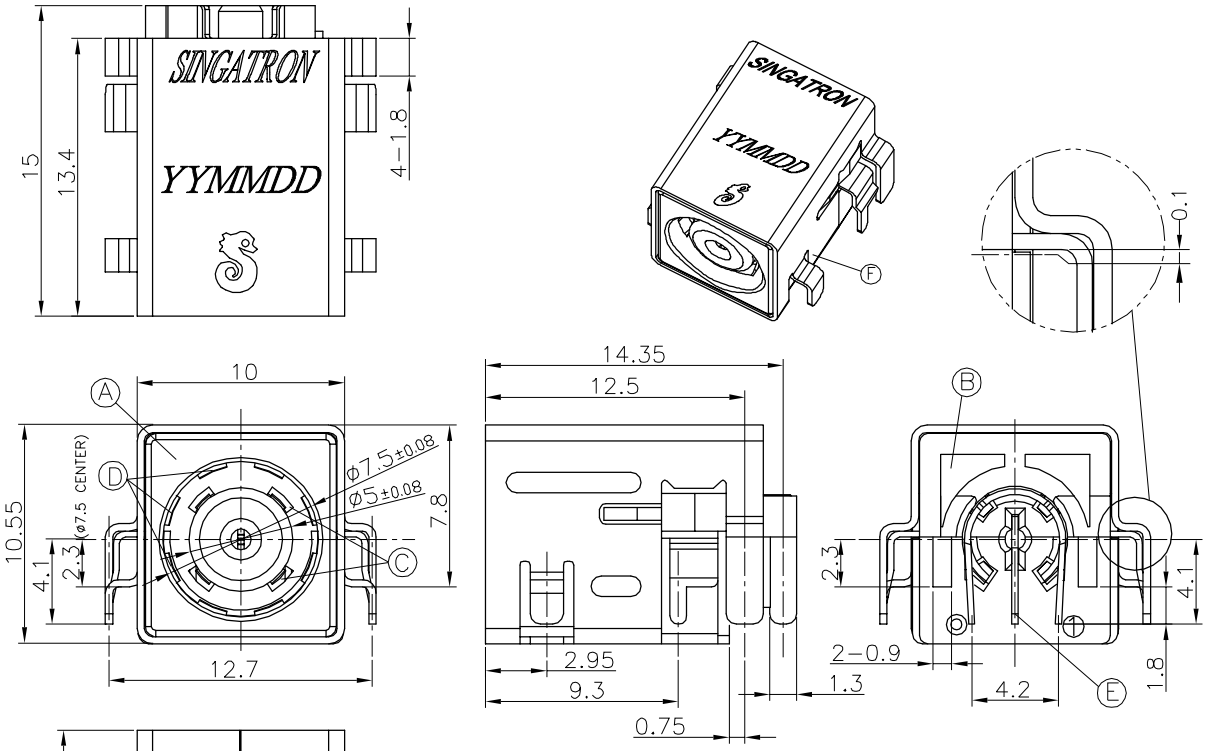

SPECIFICATIONS:

1. ELECTRICAL CHARACTERISTICS:
   1-1. RATING: 30V AC OR 42V DC AND 10 A
   1-2. CONTACT RESISTANCE: 30mΩ MAX.(INITIAL)
   1-3. DIELECTRIC WITHSTANDING VOLTAGE: 500V AC FOR ONE MINUTE.
   1-4. INSULATION RESISTANCE: 100MΩ MIN. MEASURED BY 500 VDC
2. MECHANICAL CHARACTERISTICS:
   2-1. INSERTION FORCE : 3.0 KGF MAX.
   2-2. WITHDRAWAL FORCE : 0.35 KGF MIN.
3. LIFE TEST: 5,000 CYCLES MIN.
4. OTHER GENERAL SPEC. TO REFER "2DC-S060-007 SPEC".
5. TO CONFORM TO SINGATRON HAZARDOUS SUBSTANCE FREE SPEC.
6. HALOGEN FREE PRODUCT IDENTIFICATION MARK ON JACK: ◎
7. HALOGEN FREE PRODUCT IDENTIFICATION LABEL ON PACKAGING:
8. FOR REFLOW SOLDERING LEAD-FREE PROCESS.
9. PRINTED DATE CODE" YYMMDD "ON TOP OF CONNECTOR.
10. PACKING: TAPE&REEL

YYMMDD
- DD: DAY
- MM: MONTH
- YY: YEAR

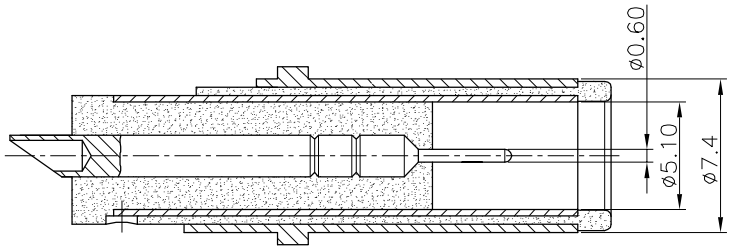

MATING PLUG: OD ø7.4 ; ID ø0.6

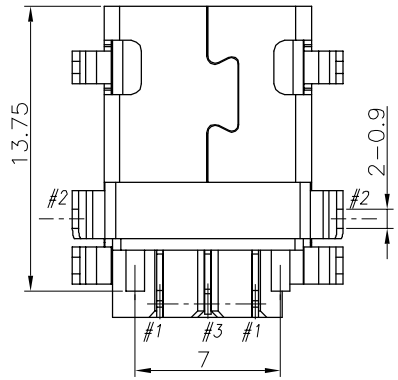

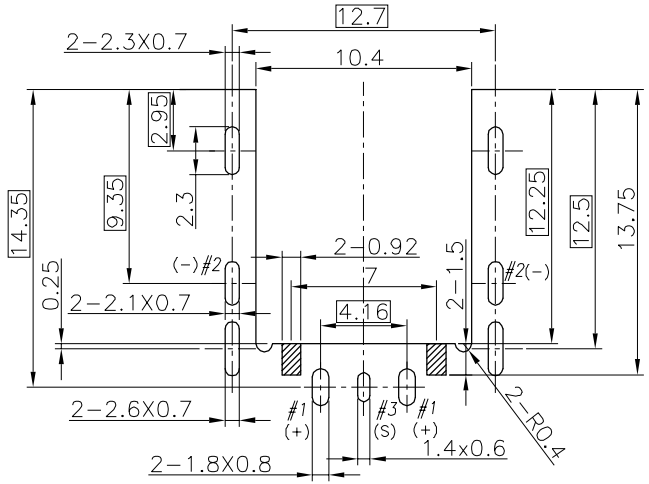

RECOMMENDED P.C.B LAYOUT
TOP VIEW (Tolerance:±0.05)

SCHEMATIC

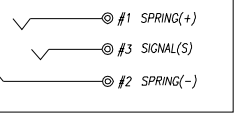

NO	DESCRIPTION	QTY	MATERIAL	PLATING & COLOR
F	SHIELDING	1	COPPER ALLOY 0.35T	NICKEL PLATING
E	SINGNAL	1	COPPER ALLOY 0.3T	GOLD FLASH ON CONTACT AREA; MATTE Sn 120u" ON SOLDER TAIL; ALL OVER Ni 50u" (F)
D	SPRING(-)	1	COPPER ALLOY 0.3T	
C	SPRING(+)	1	COPPER ALLOY 0.3T	
B	COVER	1	HIGH TEMP. THERMOPLASTIC UL 94V-0	BLACK
A	HOUSING	1	HIGH TEMP. THERMOPLASTIC UL 94V-0	BLACK

UNLESS OTHERWISE SPECIFED TOLERANCES

DECIMALS: X :±0.5, X.X :±0.3, X.XX :±0.2

ANGLES: X :±2°, X.X :±1°

Singatron Enterprise Co., Ltd.
信音企業股份有限公司

TITLE	DC POWER JACK			
DWN	Qizhen	PART NO. 2DC-S060-010		
CHKD	Sky	SCALE 4:1	UNIT: mm	
APVD	Lussen	SIZE: A3	SHEET: 1 OF 1	REV:F

CUSTOMER COPY

文件編號:RD-06-043-A