REV.	ECN NO OR DESCRIPTION	REVISED	DATE
B	ECN NO:C100571 MODIFY PIN DIM	BILLY	2011.01.19
C	ECN NO:C110072 MODIFY PIN DIM	LONGJIANG	2011.4.25
D	ECN NO:C110401 Modfiy Termial	BILLY	2012.02.09

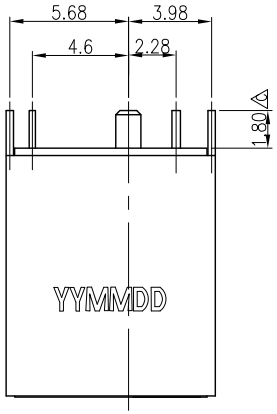

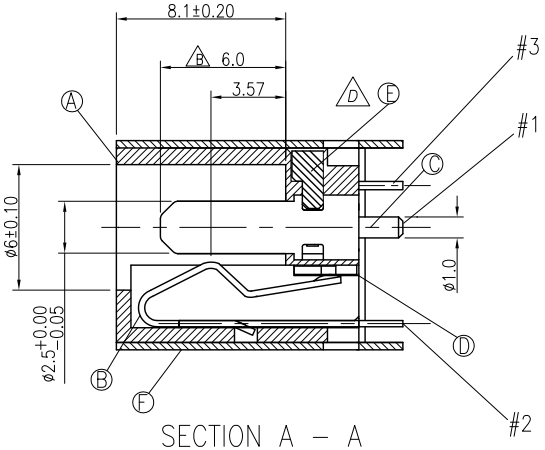

SECTION A – A

SPECIFICATIONS:

1. ELECTRICAL CHARACTERISTICS:
   1-1. RATING: 20V 5.5A
   1-2. CONTACT RESISTANCE: 30mΩ MAX.(INITIAL)
   1-3. DIELECTRIC WITHSTANDING VOLTAGE: 500V AC FOR ONE MINUTE
   1-4. INSULATION RESISTANCE: 100MΩ MIN. MEASURED BY 500 VDC
2. MECHANICAL CHARACTERISTICS:
   2-1. INSERTION FORCE : 0.3~2.5 KGF
   2-2. WITHDRAWAL FORCE : 1.0~2.5 KGF
3. LIFE TEST: 5,000 CYCLES MIN.
4. OTHER GENERAL SPEC. TO REFER "2DC0028 SERIES SPEC".
5. TO CONFORM TO SINGATRON HAZARDOUS SUBSTANCE FREE SPEC.
6. HALOGEN FREE PRODUCT IDENTIFICATION MARK ON JACK: ○
7. HALOGEN FREE PRODUCT IDENTIFICATION LABEL ON PACKING:
8. FOR REFLOW SOLDERING LEAD-FREE PROCESS.
9. MEASURING CONDITION :
   TEMPERATURE: FROM 5°C TO 35°C.
   RELATIVE HUMIDITY: FROM 40% TO 85%.

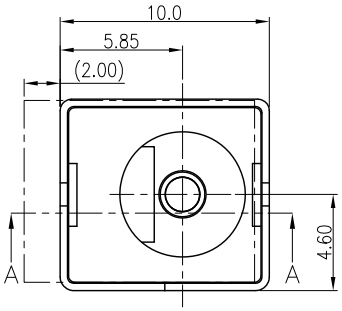

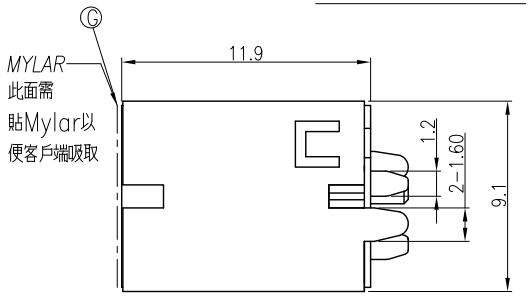

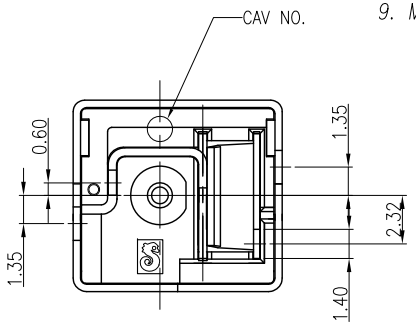

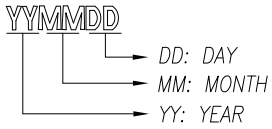

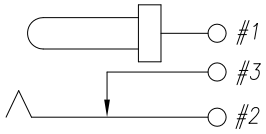

CIRCUIT

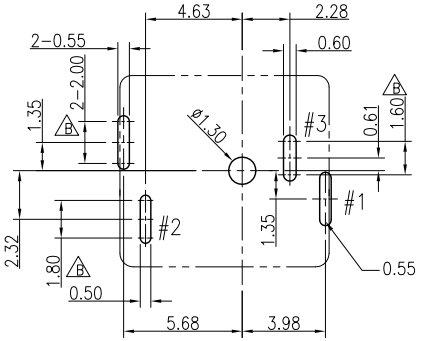

RECOMMENDED P.C.B LAYOUT(THICKNESS 1.5±0.1)

TOP VIEW(TOLERENCE IS ±0.05)

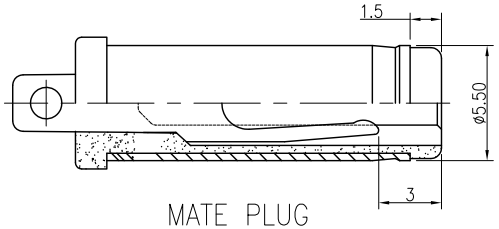

MATE PLUG

NO	DESCRIPTION	QTY	MATERIAL	PLATING & COLOR
G	MYLAR	1	INSULATION FILM 0.075t	TRANSPARENT
F	SHIELD	1	BRASS 0.35t	MATING TIN 120u"Min.
E	TERMINAL	1	HIGH TEMP. THERMPLASTIC	COLOR: BALCK
D	SHUNT TERMINAL	1	BRASS 0.4t	Ag20u"Min,Ni底 60u"Min.
C	CONTACT PIN	1	BRASS ø2.5	Ag20u"Min,Ni底 60u"Min.
B	TIP SPRING	1	COPPER ALLOY 0.3t	Ag20u"Min,Ni底 60u"Min.
A	BODY	1	HIGHT TEMP.THERMOPLASTIC UL94V-0	BLACK COLOR

UNLESS OTHERWISE SPECIFED TOLERANCES

DECIMALS: X :±0.5, X.X :±0.3, X.XX :±0.2

ANGLES: X :±2°, X.X :±1°

Singatron Enterprise Co., Ltd.
信音企業股份有限公司

TITLE	DC POWER JACK			
DWN	BILLY 2012.02.09	PART NO. 2DC-S228-B13		
CHKD	Winkan 2012.02.09	SCALE 4:1	UNIT: mm	
APVD	LMO 2012.02.09	SIZE: A3	SHEET: 1OF1	REV: D

CUSTOMER COPY

文件編號 RD-06-043-A