REV.	ECN NO OR DESCRIPTION	REVISED	DATE
D	ECN NO:C060119 Change the position of date code	JASMINE	2006.10.11
E	△E CHANGE MATING&UNMATING FORCE SPEC. ECN NO.C070263	TANGHUI	12/18'07
F	ECN:C110063 Modify Drawing	LONGJIANG	2011.4.11

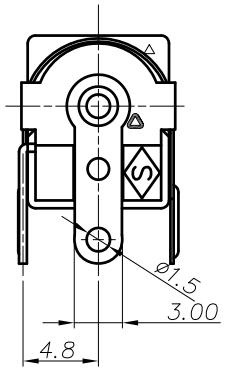

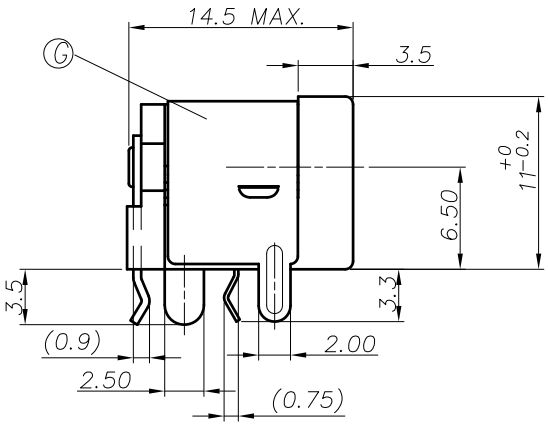

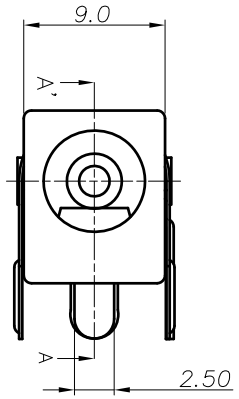

SPECIFICATIONS:

1. RATING: DC 16V 3A
2. △E INSERTION FORCE: 0.2KG−2.5KG
   WITHDRAWAL FORCE: 0.2KG−3.0KG
3. INSULATION RESISTANCE BETWEEN ANY ADJACENT TERMINALS SHALL NOT BE LESS THAN 100 MEGOHMS BY 500 VOLTS MEGGER.
4. JACK SHALL WITHSTAND 250 VOLTS BETWEEN ANY ADJACENT TERMINAL FOR ONE MINUTE.
5. CONTACT RESISTANCE SHALL NOT EXCEED 0.03 OHMS.
6. JACK SHALL WITHSTAND 5,000 CYCLES OF INSERTION AND WITHDRAWAL WITH TESTING PLUG,AND CONTACT RESISTANCE SHALL NOT EXCEED 0.1 OHMS.
7. MEASURING CONDITION:
   TEMPERATURE: FROM 5°C TO 35°C.
   RELATIVE HUMIDITY: FROM 40% TO 85%.
8. ENVIRONMENTAL SPECIFICATIONS:
   8.1 HUMIDITY TEST: HUMIDITY 90% TO 95% TEMPERATURE 40°C ± 2°C FOR 96 HOURS.
   8.2 HEAT TEST: TEMPERATURE 70°C ± 2°C (HUMIDITY BELOW 50%) FOR 96 HOURS.
   8.3 COLD TEST: TEMPERATURE −40°C ± 2°C FOR 96 HOURS.
9. TO CONFORM TO THE SINGATRON HSF SPECIFICATION.
10. GREEN PRODUCT IDENTIFICATION MARK IN JACK △
11. GREEN PRODUCT IDENTIFICATION LABEL IN PACKING: G.P. PASS
12. FOR WAVE SOLDERING LEAD−FREE PROCESS.
13. PRINTED DATE CODE "YYMMDD" ON TOP OF CONNECTOR.
    DATE CODE: YYMMDD
    - DD: DAY
    - MM: MONTH
    - YY: YEAR

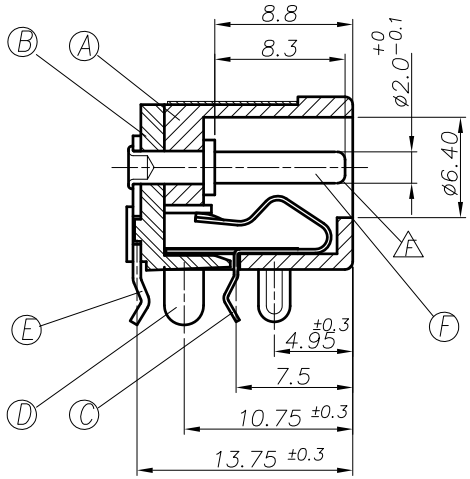

A–A' SECTION

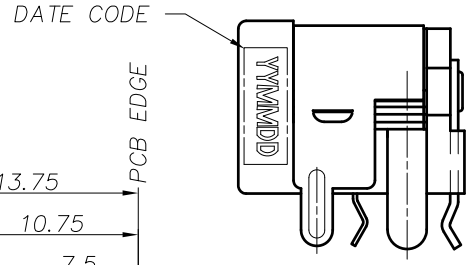

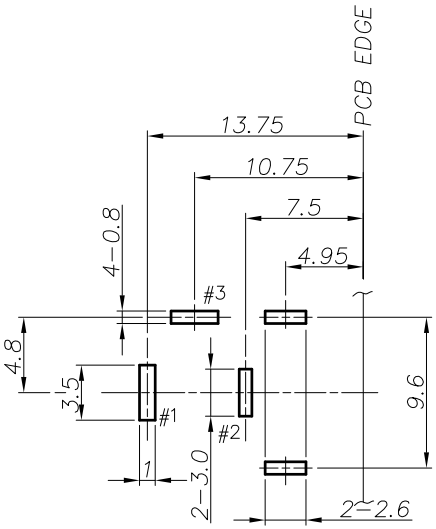

PC BOARD LAYOUT (TOLERANCE ±0.05)

(TOP VIEW)

ELECTRICAL CIRCUIT

NO	DESCRIPTION	QTY	MATERIAL	PLATING & COLOR
G	SHIELDING PLATE	1	BRASS 0.2t	Sn BRIGHT 60u"MIN,Ni50u"MIN
F	PIN	1	BRASS BAR	Ni60u"MIN,Cu80u"MIN
E	TERMINAL	1	BRASS STRIP 0.5t	Ag20u"MIN,Ni20u"MIN
D	SHUNT TERMINAL	1	BRASS STRIP 0.5t	Ag20u"MIN,Ni20u"MIN
C	TIP SPRING	1	PHOSPHOR BRONZE 0.25t	Ag20u"MIN,Ni20u"MIN
B	COVER	1	HIGH TEMP. THERMOPLASTIC	BLACK COLOR
A	BODY	1	HIGH TEMP. THERMOPLASTIC	BLACK COLOR

UNLESS OTHERWISE SPECIFED TOLERANCES

DECIMALS: X :±0.5, X.X :±0.3, X.XX :±0.2

ANGLES: X :±2°, X.X :±1°

Singatron Electronic Co., Ltd.
信音企業股份有限公司

TITLE	DC POWER JACK		
DWN	LINGJIANG 2011.4.12	PART NO. 2DC−S505−D01	
CHKD	ZJZ 2011.4.12	SCALE: N/A	UNIT: mm
APVD	LIAO 2011.4.12	SIZE: A3	SHEET: 1 OF 1	REV: F

CUSTOMER COPY

文件編號 RD−06−035−1A