REV.	ECN NO OR DESCRIPTION	REVISED	DATE
B	ECN NO. T070340 增加焊錫腳	DA	2008.03.10
C	ECN NO. T080142 修正圖面錯誤	Even	2008.07.25
D	ECN NO. S120932	Danfeng	2008.03.10
E	ECN NO. S180910-C	Xuehua	2018.9.6

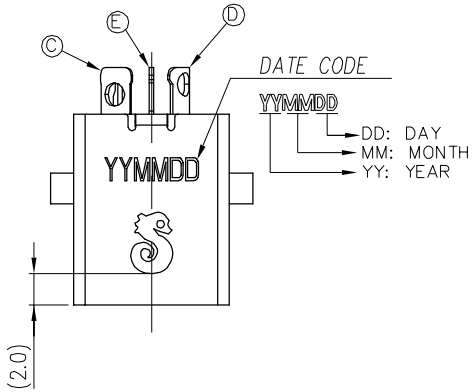

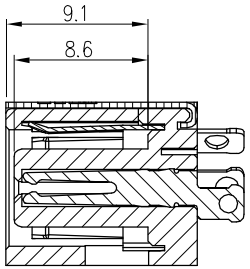

A-A SECTION
3:1

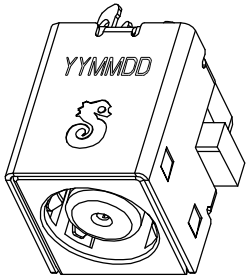

NOTES:
1. ELECTRICAL PERFORMANCES:
   1.1 CURRENT RATING: 20V 10A.
   1.2 CONTACT RESISTANCE: 10 mΩ MAX.
   1.3 INSULATION RESISTANCE: 100 MΩ MIN.
   1.4 DIELECTRIC WITHS TANDING VOLTAGE: 500V AC FOR 1 MINUTE.
2. MECHANICAL PERFORMANCES:
   2.1 MATING FORCE: 3.0Kgf Max.
   2.2 UNMATING FORCE: 0.3Kgf Min.
   2.3 MECHANICAL OPERATION: 5000 CYCLES.
   2.4 OPERATING TEMPERATURE: -40℃ TO 85℃
3. OTHER GENERAL SPEC. TO REFER "2DC1003 SERIES SPEC"
4. HALOGEN FREE PRODUCT IDENTIFICATION MARK ON JACK: △
5. HALOGEN FREE PRODUCT IDENTIFICATION LABEL ON PACKAGING: G.P. PASS
6. TO CONFORM TO SINGATRON HAZARDOUS SUBSTANCE FREE SPEC.
7. FOR HAND SOLDERING LEAD-FREE PROCESS.
8. PRINTED DATE CODE" YYMMDD " ON TOP OF CONNECTOR.

DATE CODE: YYMMDD
DD: DAY
MM: MONTH
YY: YEAR

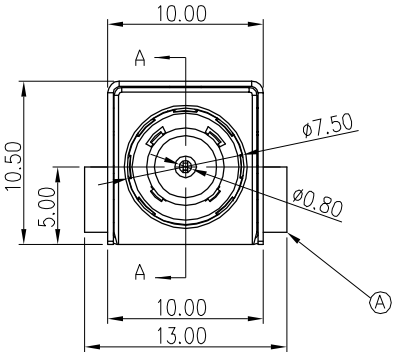

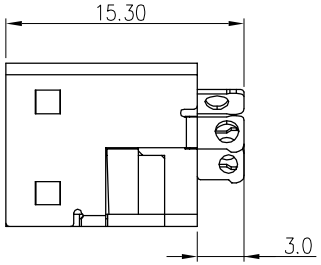

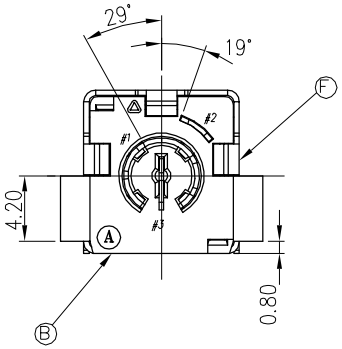

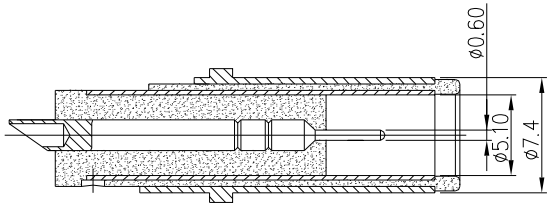

MATING PLUG (TOLERANCE: ±0.05)

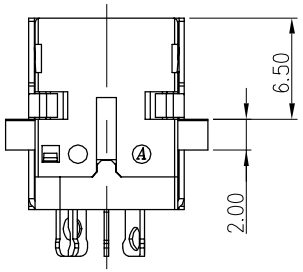

SCHEMATIC

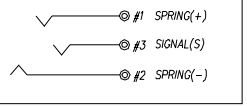

NO	DESCRIPTION	QTY	MATERIAL	PLATING & COLOR
F	SHELL	1	BRASS 0.35t	NICKEL(60u"Min.) PLATING
E	SIGNAL (S)	1	COPPER ALLOY 0.3t	GOLD FLASH(1~3u") PLATING
D	SPRING (+)	1	COPPER ALLOY 0.3t	GOLD FLASH(1~3u") PLATING
C	SPRING (-)	1	COPPER ALLOY 0.3t	GOLD FLASH(1~3u") PLATING
B	COVER	1	HIGH TEMP. THERMOPLASTIC UL 94V-0	BLACK COLOR
A	HOUSING	1	HIGH TEMP. THERMOPLASTIC UL 94V-0	BLACK COLOR

UNLESS OTHERWISE SPECIFED TOLERANCES

DECIMALS:
X : ±0.5
X.X : ±0.3
X.XX : ±0.2

ANGLES:
X : ±2°
X.X : ±1°

Singatron Enterprise Co., Ltd.
信音企業股份有限公司

TITLE	DC POWER JACK			
DWN	Xuehua	PART NO. 2DC1003-000110		
CHKD	Ron	SCALE: 3:1	UNIT: mm	
APVD	Lussen	SIZE: A3	SHEET: 1 OF 1	REV: E

CUSTOMER COPY

文件編號:RD-06-043-A