REV.	ECN NO OR DESCRIPTION	REVISED	DATE
A	PDR NO.S120611-2A	Ron	2012.08.15

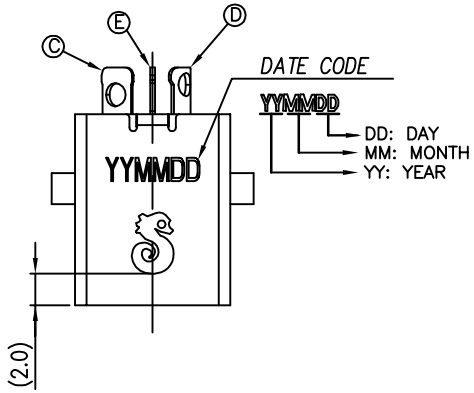

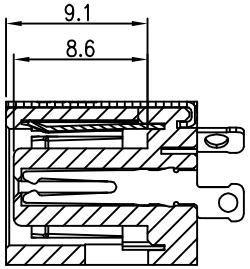

A-A SECTION

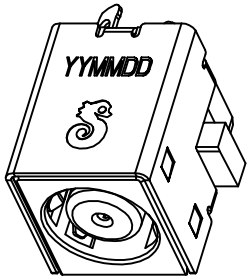

SPECIFICATIONS:

1. ELECTRICAL CHARACTERISTICS:
   1-1. RATING: 24V 6A
   1-2. CONTACT RESISTANCE:30m Ω MAX.(INITIAL)
   1-3. DIELECTRIC WITHSTANDING VOLTAGE:500V AC FOR ONE MINUTE.
   1-4. INSULATION RESISTANCE: 100MΩ MIN. MEASURED BY 500 VDC
2. MECHANICAL CHARACTERISTICS:
   2-1. INSERTION FORCE : 3.0 Kgf Max.
   2-2. WITHDRAWAL FORCE : 0.5~3.0Kgf.
3. LIFE TEST: 5,000 CYCLES MIN.
4. OTHER GENERAL SPEC. TO REFER "2DC1003-002110H SPEC".
5. GREEN PRODUCT IDENTIFICATION MARK ON JACK: △
6 GREEN PRODUCT IDENTIFICATION LABEL ON PACKAGING: **G.P. PASS**
7. FOR REFLOW SOLDERING LEAD-FREE PROCESS.

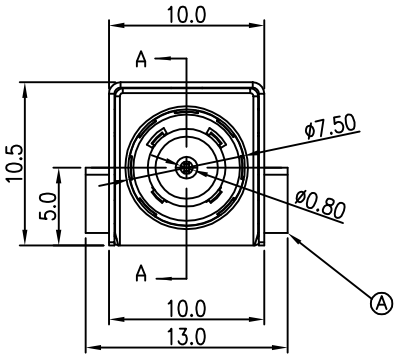

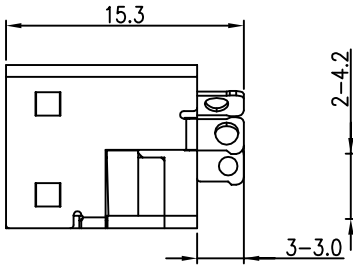

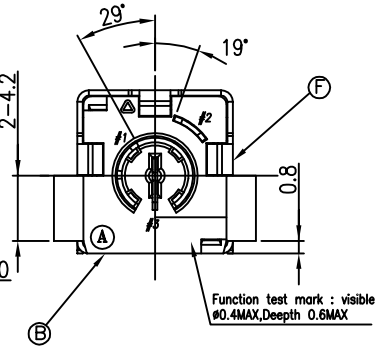

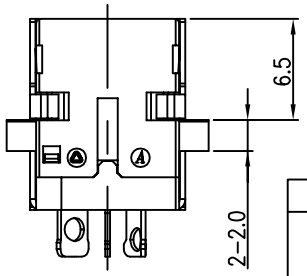

SCHEMATIC

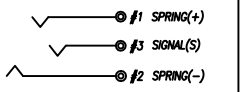

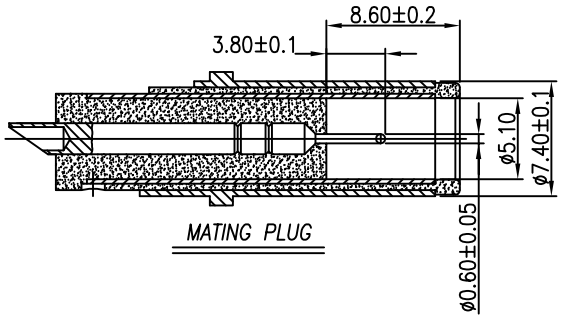

MATING PLUG

NO	DESCRIPTION	QTY	MATERIAL	PLATING & COLOR
F	SHELL	1	BRASS 0.35t	Ni 60u" MIN
E	SIGNAL (S)	1	COPPER ALLOY 0.3t	GOLD FLASH OVER Ni 50u"
D	SPRING (+)	1	COPPER ALLOY 0.3t	GOLD FLASH OVER Ni 50u"
C	SPRING (-)	1	COPPER ALLOY 0.3t	GOLD FLASH OVER Ni 50u"
B	COVER	1	HIGH TEMP. THERMOPLASTIC UL 94V-0	BLUE
A	HOUSING	1	HIGH TEMP. THERMOPLASTIC UL 94V-0	BLUE

UNLESS OTHERWISE SPECIFED TOLERANCES

DECIMALS: X :±0.5, X.X :±0.3, X.XX :±0.2

ANGLES: X :±2°, X.X :±1°

Singatron Enterprise Co., Ltd.
信音企業股份有限公司

TITLE	DC POWER JACK			
DWN	Ron	PART NO. 2DC1003-002110H		
CHKD	Sky	SCALE: 3:1	UNIT: mm	
APVD	Lussen	SIZE: A3	SHEET: 1 OF 1	REV: A

CUSTOMER COPY

文件編號 RD-06-043-A