REV.	ECN NO OR DESCRIPTION	REVISED	DATE
A	PRODUCT RELEASE	R.YUAN	2009.04.22
B	ECN NO:C100404 Add Dimension	LONGJIANG	2010.12.28

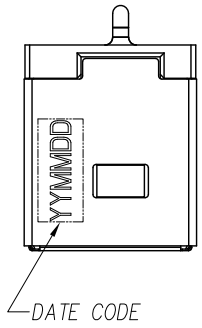

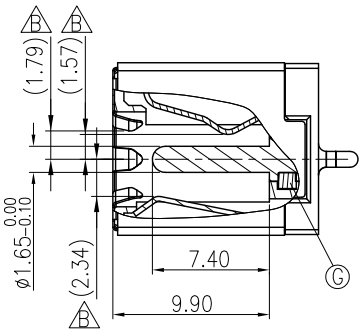

SECTION A-A

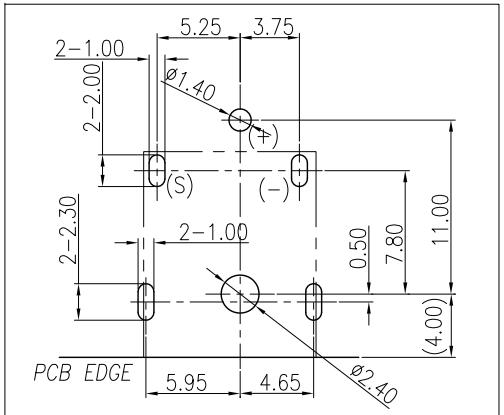

RECOMMENDED PCB LAYOUT(thickness 1.0mm)

TOP VIEW(TOLERANCE ±0.05)

SPECIFICATIONS:

1. ELECTRICAL CHARACTERISTICS:
   1-1. RATING: 20V 7A
   1-2. CONTACT RESISTANCE: 30mΩ MAX.(INITIAL)
   1-3. DIELECTRIC WITHSTANDING VOLTAGE: 500V AC FOR ONE MINUTE.
   1-4. INSULATION RESISTANCE: 100MΩ MIN. MEASURED BY 500 VDC
2. MECHANICAL CHARACTERISTICS:
   2-1. INSERTION FORCE : 0.4~2.0 KGF
   2-2. WITHDRAWAL FORCE : 0.8~3.0 KGF
3. LIFE TEST: 5,000 CYCLES MIN.
4. TO CONFORM TO SINGATRON HAZARDOUS SUBSTANCE FREE SPEC.
5. GREEN PRODUCT IDENTIFICATION MARK ON JACK: ◎
6. GREEN PRODUCT IDENTIFICATION LABEL ON PACKAGING:
7. FOR REFLOW SOLDERING LEAD-FREE PROCESS.
8. ORDER NO.
   2DC1019-0001X1
   - PACKAGING
     1: TAPE & REEL
   - HOUSING COLOR
     1: BLACK
     2: YELLOW 123C
   - CONTACT PLATING
     1: GOLD-PLATED

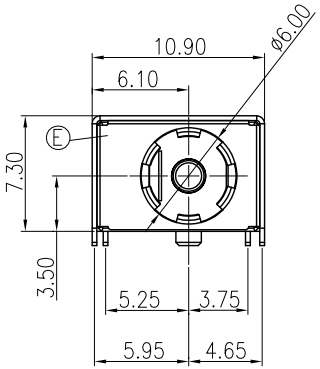

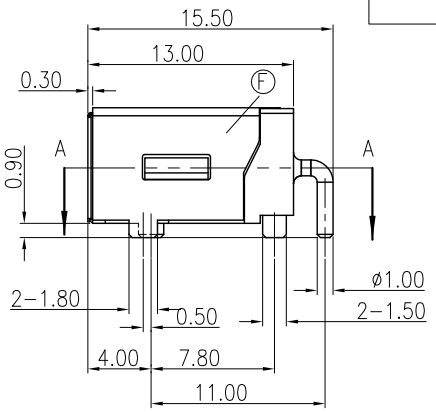

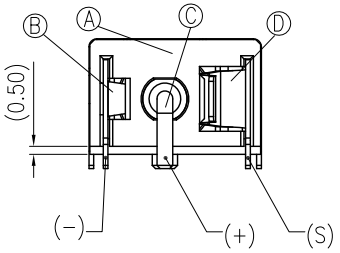

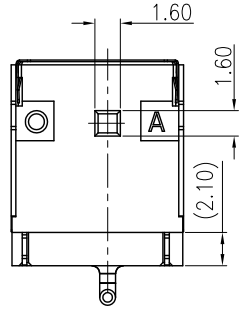

SCHEMATIC

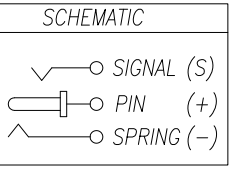

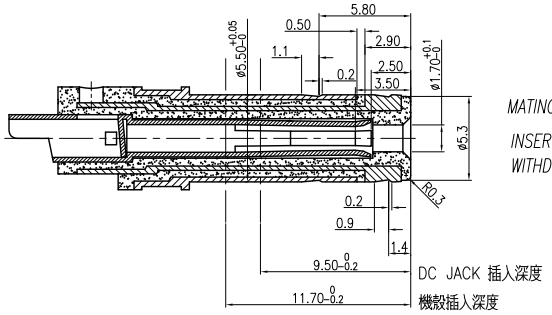

MATING WITH ø1.65±0.01 mm PIN :

INSERTION FORCE : 1.0 KGF MAX.

WITHDRAWAL FORCE : 0.6 KGF MIN.

MATING PLUG

(TOLERANCE ±0.05)

NO	DESCRIPTION	QTY	MATERIAL	PLATING & COLOR
G	STOPPER	1	HIGH TEMP. THERMOPLASTIC	BLACK COLOR
F	SHELL	1	COPPER ALLOY 0.3T	NICKEL-PLATED
E	GROUND	1	STAINLESS 0.1t	N/A
D	SIGNAL	1	COPPER ALLOY 0.3T	GOLD-PLATED(1~3u" Min.) AT CONTACT AREA
C	PIN	1	COPPER ALLOY	GOLD-PLATED(1~3u")
B	SPRING	1	COPPER ALLOY 0.3T	GOLD-PLATED(1~3u" Min.) AT CONTACT AREA
A	HOUSING	1	HIGH TEMP. THERMOPLASTIC	SEE ORDER No.

UNLESS OTHERWISE SPECIFED TOLERANCES

DECIMALS: X :±0.5, X.X :±0.3, X.XX :±0.2

ANGLES: X :±2°, X.X :±1°

Singatron Enterprise Co., Ltd.
信音企業股份有限公司

TITLE	DC POWER JACK		
DWN	Longjiang 11.01.03	PART NO. 2DC1019-0001X1	
CHKD	ZJZ 11.01.03	SCALE 3:1	UNIT: mm
APVD	Liao 11.01.03	SIZE: A3	SHEET:1 OF 1 REV: B

CUSTOMER COPY

文件編號 RD-06-043-A