REV.	ECN NO OR DESCRIPTION	REVISED	DATE
A	PDR NO: T120726-6A	Springwu	2012.09.10
B	ECN NO: S160413-C B	YUREN	2016.05.17

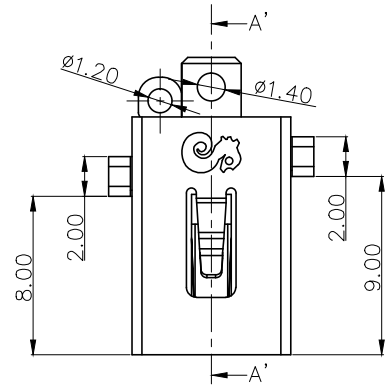

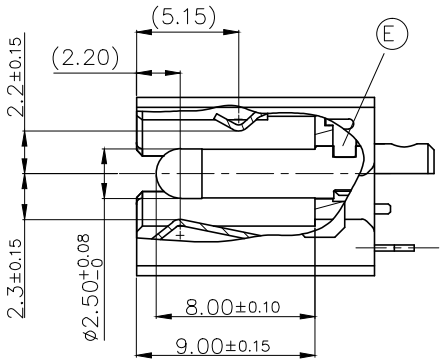

SECTION A'-A'

SPECIFICATIONS:

1. ELECTRICAL CHARACTERISTICS:
   1-1. RATING: 20V 7A
   1-2. CONTACT RESISTANCE: 30mΩ MAX.(INITIAL)
   1-3. DIELECTRIC WITHSTANDING VOLTAGE: 500V AC FOR ONE MINUTE.
   1-4. INSULATION RESISTANCE: 100MΩ MIN. MEASURED BY 500 VDC
2. MECHANICAL CHARACTERISTICS:
   2-1. INSERTION/WITHDRAWAL FORCE(BEFORE) : 1.0~3.0 KG.
   2-2. INSERTION/WITHDRAWAL FORCE(AFTER) : 0.5 KG MIN.
3. LIFE TEST: 10,000 CYCLES.
4. TO CONFORM TO SINGATRON HAZARDOUS SUBSTANCE FREE SPEC.
5. HALOGEN FREE PRODUCT IDENTIFICATION MARK ON JACK:
6. HALOGEN FREE PRODUCT IDENTIFICATION LABEL ON PACKAGING
7. PRINTED DATE CODE" YYMMDD" ON TOP OF CONNECTOR.

DATE CODE: YYMMDD
- DD: DAY
- MM: MONTH
- YY: YEAR

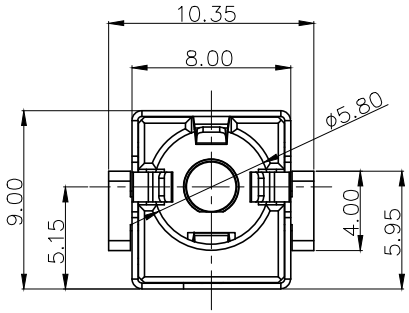

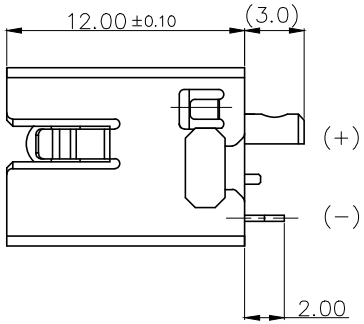

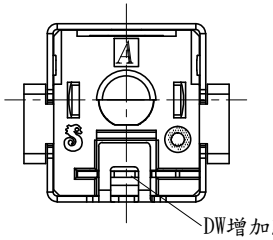

SCHEMATIC

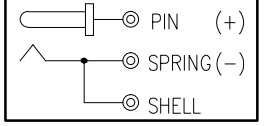

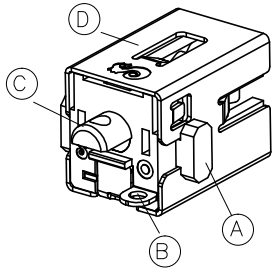

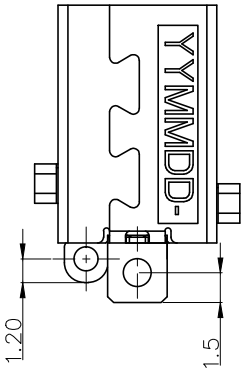

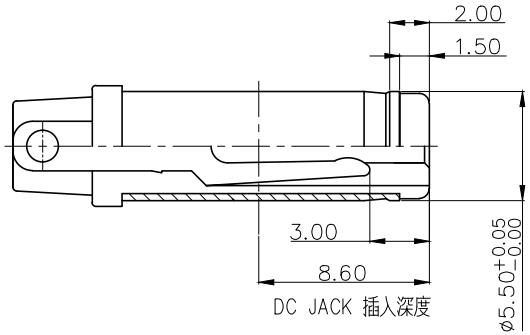

DC JACK 插入深度

MATING PLUG

NO	DESCRIPTION	QTY	MATERIAL	PLATING & COLOR
E	STOPPER	1	HIGH TEMP. THERMOPLASTIC,UL94V-0	BLACK
D	SHELL	1	STAINLESS ,T=0.30	N/A
C	PIN	1	BRASS	Gold flash over Ni 50u" MIN.
B	SPRING	1	PHOSPHOR BRONZE,T=0.30	Au 1u" Min. on Contact Area. Sn 100u" Min. on Solder Tail. Over Nickel 50u" Min. plating.
A	BODY	1	HIGH TEMP. THERMOPLASTIC,UL94V-0	BLACK

UNLESS OTHERWISE SPECIFED TOLERANCES

DECIMALS: X :±0.5, X.X :±0.3, X.XX :±0.2

ANGLES: X :±2°, X.X :±1°

Singatron Enterprise Co., Ltd.
信音企業股份有限公司

TITLE	DC POWER JACK			
DWN	YUREN	PART NO. 2DC3005-008111F		
CHKD	CERRY	SCALE: 4:1	UNIT: mm	
APVD	LIAO	SIZE: A3	SHEET: 1 OF 1	REV:B

CUSTOMER COPY

文件編號 RD-06-043-A