REV.	ECN NO OR DESCRIPTION	REVISED	DATE
A	PDR NO: S130709-3A	Allen	2014.03.11

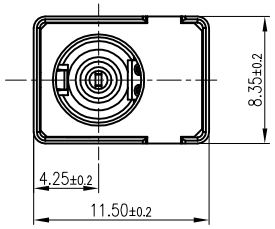

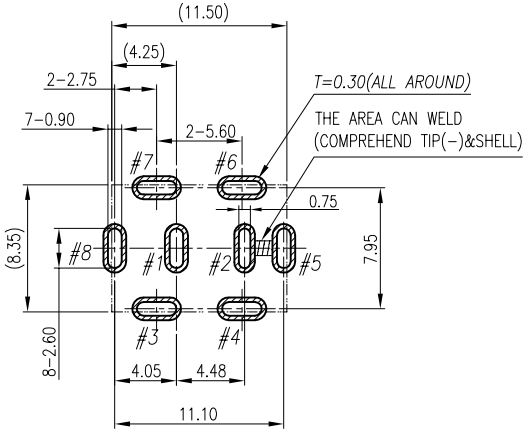

RECOMMEND P.C.B LAYOUT
TOP VIEW(TOLERANCES:±0.05)

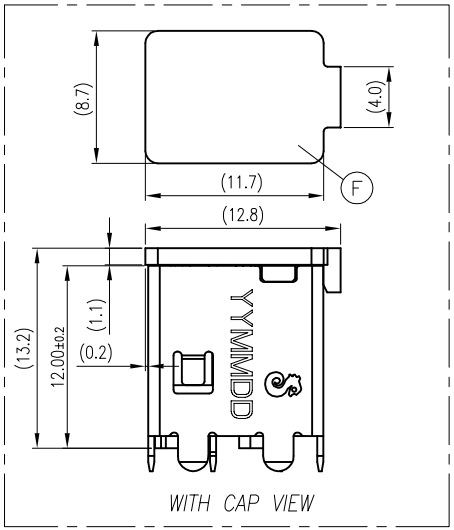

WITH CAP VIEW

SPECIFICATIONS:

1. ELECTRICAL CHARACTERISTICS:
   1-1.RATING: DC 20V 7A
   1-2. CONTACT RESISTANCE: 30mΩ MAX.(INITIAL)
   1-3. DIELECTRIC WITHSTANDING VOLTAGE: 500V AC FOR ONE MINUTE
   1-4. INSULATION RESISTANCE: 100MΩ MIN. MEASURED BY 500 VDC
2. MECHANICAL CHARACTERISTICS:
   2-1. MATING FORCE :3.0 kgf Max.
   2-2. UNMATING FORCE : 1.0~3.0 kgf (INITIAL)
   0.7~3.0 kgf. (AFTER LIFE TEST & USE NEW PLUG TEST).
3. LIFE TEST: 10,000 CYCLES MIN.
4. TO CONFORM TO SINGATRON HAZARDOUS SUBSTANE FREE SPEC.
5. HALOGEN FREE PRODUCT IDENTIFICATION MARK ON JACK:
6. HALOGEN FREE PRODUCT IDENTIFICATION LABEL ON PACKAGING:
7. FOR REFLOW SOLDERING LEAD-FREE PROCESS.
8. PRINTED DATE CODE" YYMMDD " ON TOP OF CONNECTOR.
   - DD: DAY
   - MM: MONTH
   - YY: YEAR
9. SAMSUNG PART NO: 3722-003852

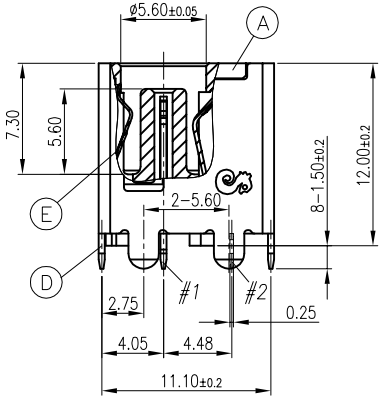

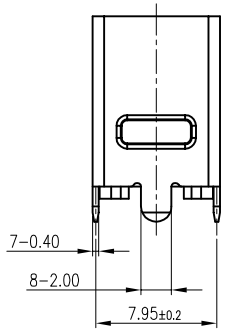

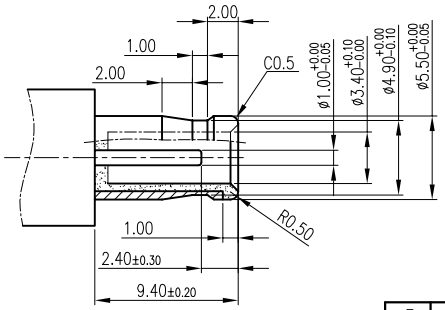

MATING PLUG
TOLERANCE:±0.10

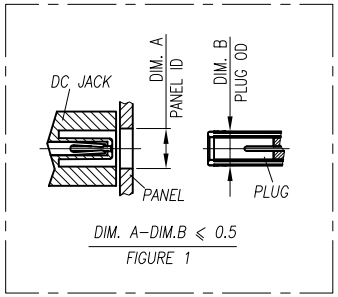

DIM. A-DIM.B ≤ 0.5
FIGURE 1

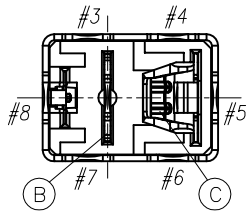

SCHEMATIC
#1 TERMINAL(+)
#3~#8 SHELL
#2 TIP(-)

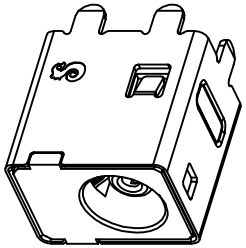

F	CAP	1	HIGH THERMOPLASTIC TEMP UL 94V-0	BLACK
E	GROUND	1	STAINLESS 0.15T	N/A
D	SHELL	1	COPPER ALLOY 0.4T	Ni 60u.
C	TIP(-)	1	COPPER ALLOY 0.25T	Sn 120u"Min OVER Ni 50u"
B	TERMIANL(+)	1	COPPER ALLOY 0.4T	GOLD FLASH ON CONTACT AREA; Sn 120u" ON SOLDER TAIL; ALL OVER Ni 60u"
A	BODY	1	HIGH THERMOPLASTIC TEMP UL 94V-0	BLACK

UNLESS OTHERWISE SPECIFED TOLERANCES

Singatron Enterprise Co., Ltd.
信音企業股份有限公司

DECIMALS:
X :±0.1
X.X :±0.1
X.XX :±0.1

ANGLES:
X :±2°
X.X :±1°

TITLE	DC JACK			
DWN	Allen	PART NO. 2DC3110-000111F		
CHKD	Sky	SCALE:1:1	UNIT: mm	
APVD	Lussen	SIZE: A3	SHEET:1 OF 1	REV:A

CUSTOMER COPY(FOR SAMSUNG)

文件編號 RD-06-043-A