REV.	ECN NO OR DESCRIPTION	REVISED	DATE
A	PDR NO. T150213-7A	Ron	2016.01.13

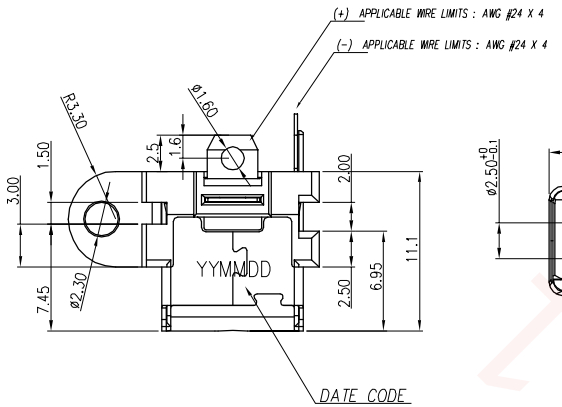

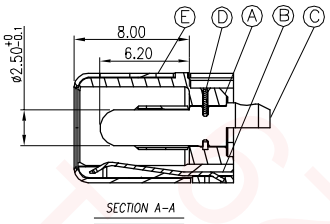

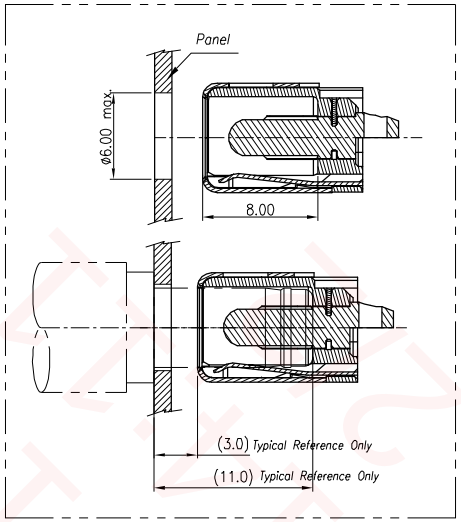

SPECIFICATIONS:

1. ELECTRICAL CHARACTERISTICS:
   1-1. RATING: 20V 10A
   1-2. CONTACT RESISTANCE: 15mΩ MAX.
   1-3. DIELECTRIC WITHSTANDING VOLTAGE: 500V AC FOR ONE MINUTE.
   1-4. INSULATION RESISTANCE: 100MΩ MIN. MEASURED BY 500 VDC
2. MECHANICAL CHARACTERISTICS:
   2-1. INSERTION FORCE : 0.8~2.0 kgf (INITIAL / AFTER LIFE TEST)
   2-2. WITHDRAWAL FORCE : 0.8~2.0 kgf (INITIAL / AFTER LIFE TEST)
3. TEMPERATURE RISE CAN'T EXCEED 30°C
4. LIFE TEST: 8,000 CYCLES MIN.
5. WEIGHT : 1.98 g
6. OTHER GENERAL SPEC. TO REFER "2DC3156 SERIES SPEC".
7. TO CONFORM TO SINGATRON HAZARDOUS SUBSTANCE FREE SPEC.
8. HALOGEN FREE PRODUCT IDENTIFICATION MARK ON JACK:
9. HALOGEN FREE PRODUCT IDENTIFICATION LABEL ON PACKAGING:
10. FOR HAND SOLDERING LEAD-FREE PROCESS.
11. PRINTED DATE CODE"YYMMDD" ON TOP OF CONNECTOR.
    - DD: DAY
    - MM: MONTH
    - YY: YEAR

SCHEMATIC

#1 PIN (+)

#2 SPRING (-)

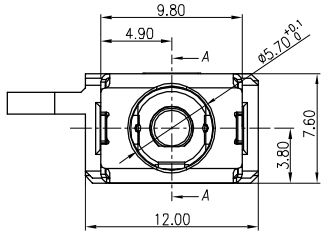

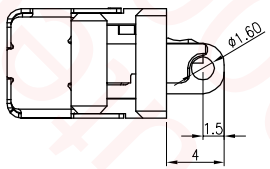

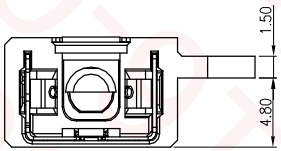

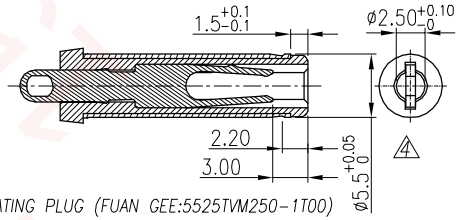

MATING PLUG (FUAN GEE:5525TVM250-1T00)

TOLERANCE:X.XX:0.10

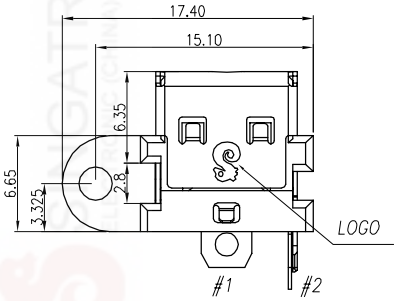

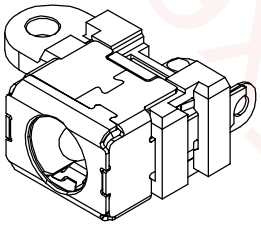

ITEM	DESCRIPTION	QTY	MATERIAL	PLATING & COLOR
E	SHELL	1	STAINLESS 0.3T (SUS 304)	Ni 60u" MIN.
D	TERMINAL	1	STAINLESS 0.3T (SUS 301)	N/A
C	PIN	1	BRASS BAR(HB159-1.5B)	GOLD FLASH OVER Ni 50u"
B	SPRING	1	PHOSPHOR BRONZE (C5210-EH 0.25T)	MATTE Sn 120u" OVER Ni 60u"
A	BODY	1	PA 4T +30%GF UL 94V-0	BLACK

UNLESS OTHERWISE SPECIFED TOLERANCES

DECIMALS: X :±0.5, X.X :±0.3, X.XX :±0.2

ANGLES: X :±2°, X.X :±1°

Singatron Enterprise Co., Ltd.
信音企業股份有限公司

TITLE	DC POWER JACK			
DWN	Ron	PART NO.2DC3156-001111F		
CHKD	Sky	SCALE --	UNIT: mm	
APVD	Lussen	SIZE: A3	SHEET:1 OF 2	REV:A

CUSTOMER COPY

文件編號 RD-06-043-A