REV.	ECN NO OR DESCRIPTION	REVISED	DATE
A	PDR NO: S220601-3A	Springwu	2022.08.30
B	ECN NO.: S202304-R07/B	Springwu	2023.06.19

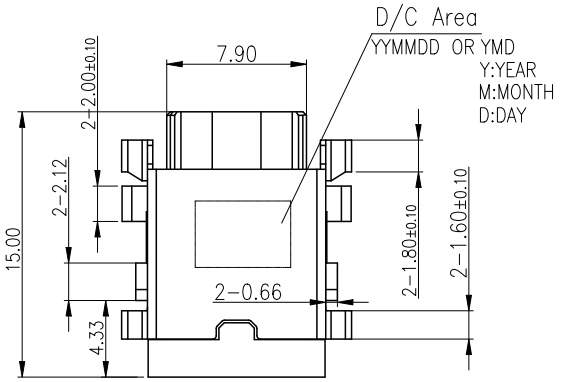

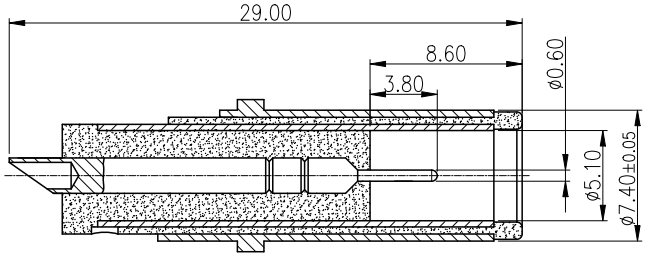

MATING PLUG: ø7.4xø5.1xP0.6x29.0L
(TOLERANCE ±0.05)

SPECIFICATIONS:

1. ELECTRICAL CHARACTERISTICS:
   1-1. RATING: DC 20V/14.50A.
   1-2. CONTACT RESISTANCE: 30mΩ MAX.(INITIAL)
   1-3. DIELECTRIC WITHSTANDING VOLTAGE: 500V DC FOR ONE MINUTE.
   1-4. INSULATION RESISTANCE: 100MΩMIN. MEASURED BY 500 VDC
2. MECHANICAL CHARACTERISTICS:
   2-1. INSERTION FORCE : 3.0 KGF MAX.
   2-2. WITHDRAWAL FORCE : 0.35 KGF MIN.
3. LIFE TEST: 5,000 CYCLES MIN.
4. OTHER GENERAL SPEC. TO REFER "2DC3184-003111F SPEC".
5. TO CONFORM TO SINGATRON HAZARDOUS SUBSTANCE FREE SPEC.
6. HALOGEN FREE PRODUCT IDENTIFICATION MARK ON JACK: ◎
7. HALOGEN FREE PRODUCT IDENTIFICATION LABEL ON PACKAGING:
8. FOR REFLOW SOLDERING LEAD-FREE PROCESS.
9. PACKAGING: TAPE&REEL

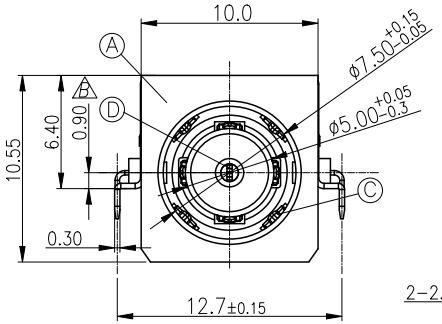

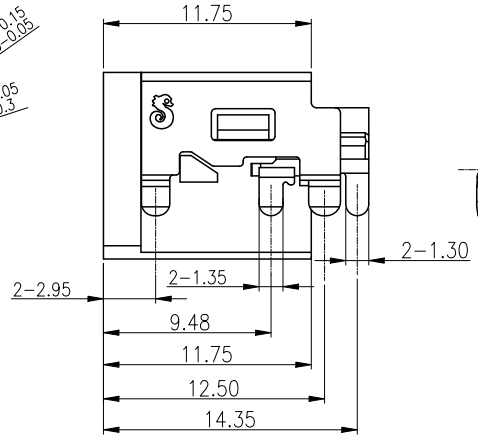

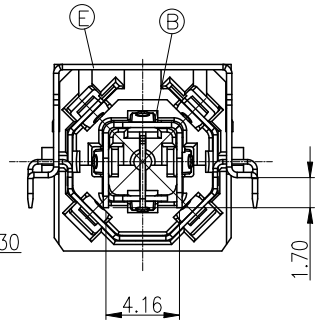

SCHEMATIC

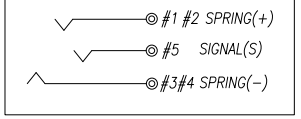

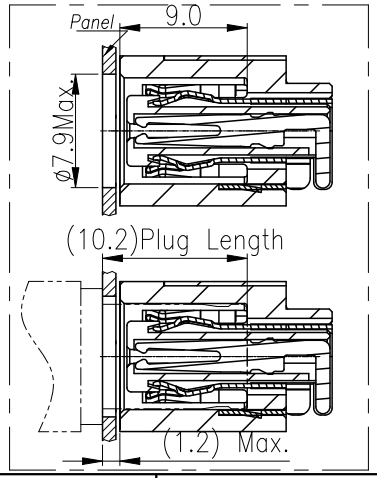

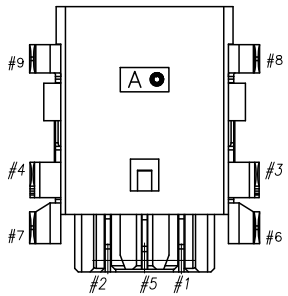

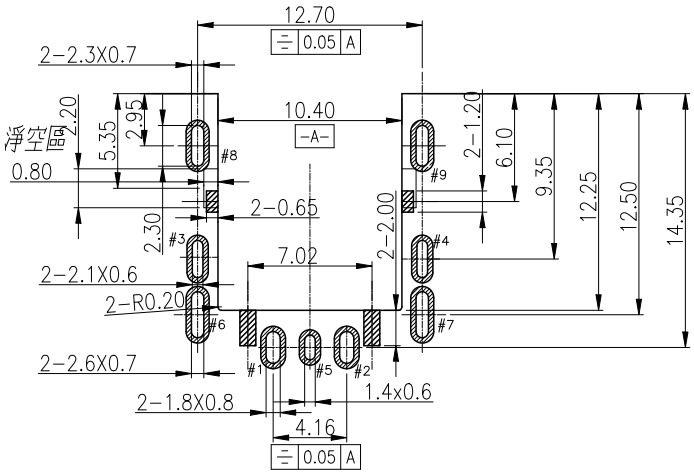

RECOMMENDED P.C.B LAYOUT
TOP VIEW (Tolerance:±0.05)

NO	DESCRIPTION	QTY	MATERIAL	PLATING & COLOR
E	SHIELDING	1	SUS 0.3T	Ni 60u"Min
D	SIGNAL	1	COPPER ALLOY 0.30T	Ni (50u" Min.) UNDERPLATED OVER ALL , GOLD-PLATED(3u" Min.)AT CONTACT AREA . AND Sn 120u" Min. ON SOLDER TAIL .
C	SPRING(-)	1	COPPER ALLOY 0.25T	
B	SPRING(+)	1	COPPER ALLOY 0.30T	
A	HOUSING	1	LCP UL 94V-0 (HALOGEN FREE)	BLACK

UNLESS OTHERWISE SPECIFED TOLERANCES

DECIMALS: X :±0.5, X.X :±0.3, X.XX :±0.2
ANGLES: X :±2°, X.X :±1°

Singatron Enterprise Co., Ltd.
信音企業股份有限公司

TITLE	DC POWER JACK		
DWN	Springwu	PART NO. 2DC3184-003111F	
CHKD	Lussen	SCALE 4:1	UNIT: mm
APVD	Liao	SIZE: A3	SHEET:1 OF 2 REV:B

CUSTOMER COPY

文件編號:RD-06-043-A

REV.	ECN NO OR DESCRIPTION	REVISED	DATE
A	PDR NO: S220601-3A	Springwu	2022.08.30
B	ECN NO: S202304-R07	Springwu	2023.06.19

1.負極接觸狀態

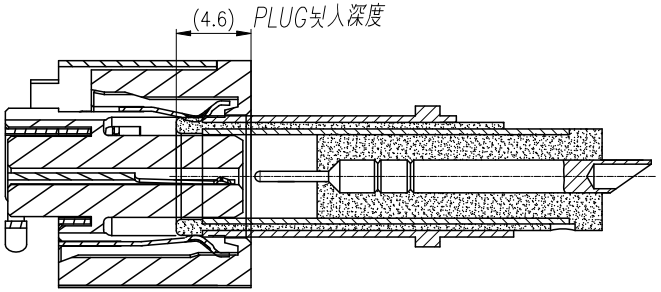

2.正極接觸狀態

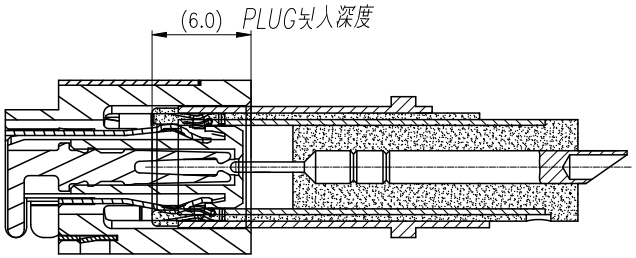

3.Signal接觸狀態

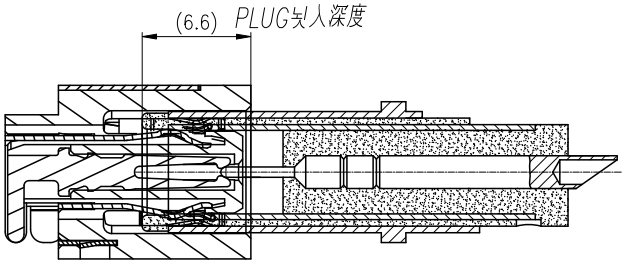

4.FULL MATING狀態

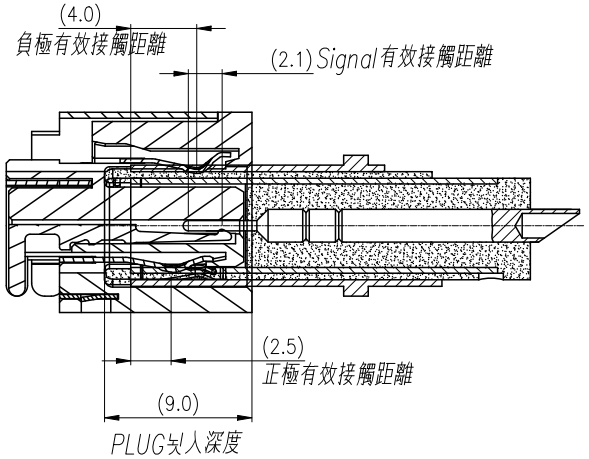

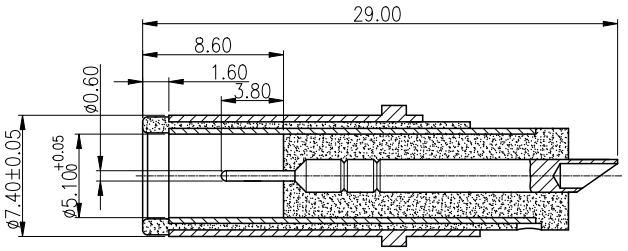

MATING PLUG: ø7.4xø5.1xP0.6x29.0L
(TOLERANCE ±0.05)

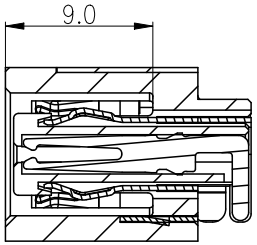

NO	DESCRIPTION	QTY	MATERIAL	PLATING & COLOR

UNLESS OTHERWISE SPECIFED TOLERANCES

Singatron Enterprise Co., Ltd.
信音企業股?有限公司

DECIMALS: X :±0.5, X.X :±0.3, X.XX :±0.2
ANGLES: X :±2°, X.X :±1°

TITLE	MATING DRAWING		
DWN	Springwu	PART NO. 2DC3184-003111F	
CHKD	Lussen	SCALE 4:1	UNIT: mm
APVD	Liao	SIZE: A3	SHEET:2 OF 2 REV:B

CUSTOMER COPY

文件編號:RD-06-043-A