REV.	ECN NO OR DESCRIPTION	REVISED	DATE
B	ECR : W090019	Victor	2009.07.30
C	ECN NO:C100404 Add Dimension	LONGJIANG	2010.12.28
D	ECN:C120150MODIFY MECHANICAL CHARACTERISTICS	LONGJIANG	2012.06.06

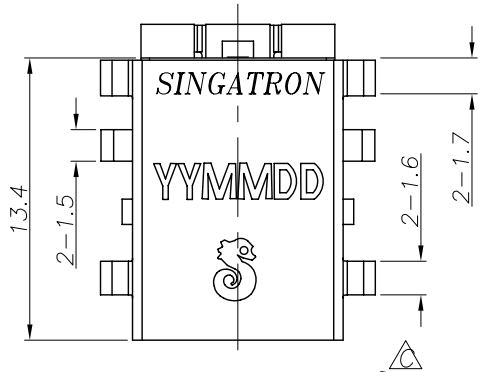

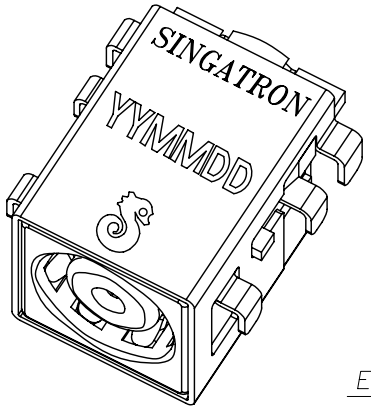

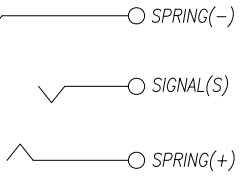

TERMINAL NO.
ELECTRICAL CIRCUIT

SPECIFICATIONS:

1. ELECTRICAL CHARACTERISTICS:
   - 1-1. RATING: 30V AC 10A
   - 1-2. CONTACT RESISTANCE: 30mΩ MAX.(INITIAL)
   - 1-3. DIELECTRIC WITHSTANDING VOLTAGE: 500V AC FOR ONE MINUTE.
   - 1-4. INSULATION RESISTANCE: 100MΩ MIN. MEASURED BY 500 VDC
2. MECHANICAL CHARACTERISTICS:
   - △D 2-1. INSERTION FORCE : 0.5~2.5 KGF
   - 2-2. WITHDRAWAL FORCE : 0.5~2.0 KGF
3. LIFE TEST: 5,000 CYCLES MIN.
4. OTHER GENERAL SPEC. TO REFER "2DC4001 SERIES SPEC".
5. TO CONFORM TO SINGATRON HAZARDOUS SUBSTANCE FREE SPEC.
6. HALOGEN FREE PRODUCT IDENTIFICATION MARK ON JACK: ◎
7. HALOGEN FREE PRODUCT IDENTIFICATION LABEL ON PACKAGING: HF PASS HALOGEN FREE HAZARDOUS SUBSTANCE FREE
8. FOR REFLOW SOLDERING LEAD-FREE PROCESS.
9. PRINTED DATE CODE" YYMMDD "ON TOP OF CONNECTOR. YYMMDD
   - DD: DAY
   - MM: MONTH
   - YY: YEAR

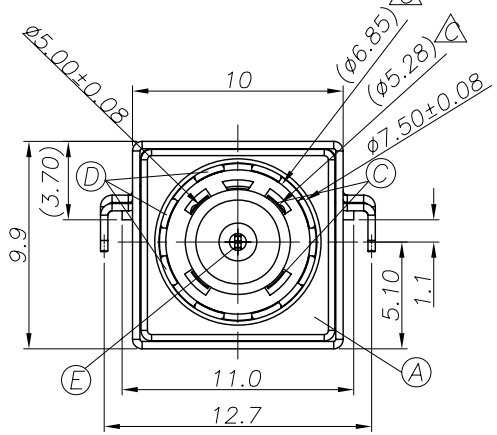

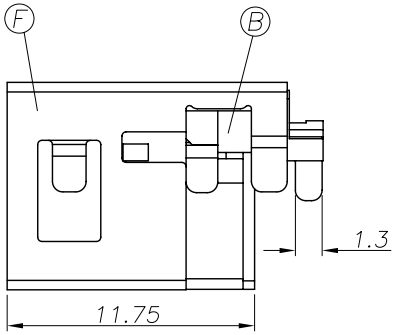

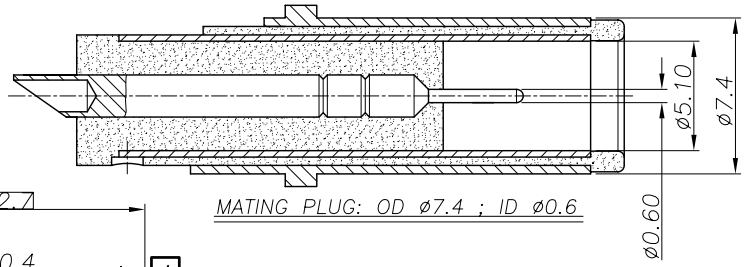

MATING PLUG: OD ø7.4 ; ID ø0.6

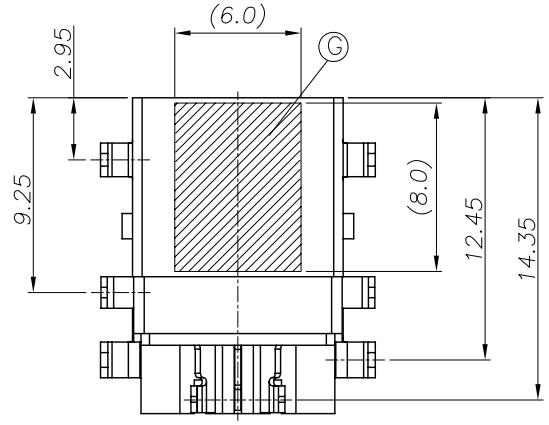

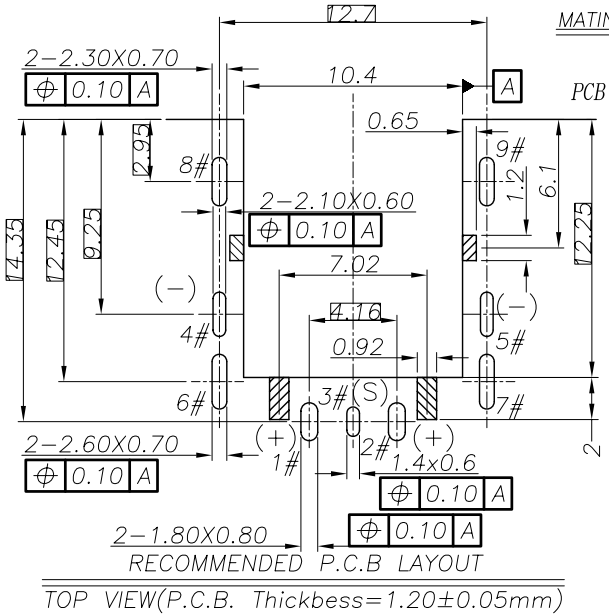

TOP VIEW(P.C.B. Thickbess=1.20±0.05mm)

NO	DESCRIPTION	QTY	MATERIAL	PLATING & COLOR
G	ISOLATION	1	MYLAR 0.075t	TRANSPARENT
F	SHIELDING	1	COPPER ALLOY 0.35t	Ni PLATING
E	SIGNAL	1	COPPER ALLOY 0.3t	GOLD FLASH
D	SPRING(-)	1	COPPER ALLOY 0.3t	GOLD FLASH
C	SPRING(+)	1	COPPER ALLOY 0.3t	GOLD FLASH
B	COVER	1	HIGH TEMP. THERMOPLASTIC	BLACK UL 94V-0
A	XXXX	1	HIGH TEMP. THERMOPLASTIC	BLACK UL 94V-0

UNLESS OTHERWISE SPECIFED TOLERANCES

DECIMALS: X :±0.5, X.X :±0.3, X.XX :±0.2

ANGLES: X :±2°, X.X :±1°

Singatron Enterprise Co., Ltd.
信音企業股份有限公司

TITLE	DC Power Jack Sink Type		
DWN	LONGJIANG 2012.06.06	PART NO. 2DC4001-000012	
CHKD	ZJZ 2012.06.06	SCALE 4:1	UNIT: mm
APVD	LIAO 2012.06.06	SIZE: A3	SHEET: 1 OF 1	REV: D

CUSTOMER COPY

文件編號:RD-06-043-A