REV.	ECN NO OR DESCRIPTION	REVISED	DATE
D	ECN NO: 920008	EVEN	2005.7.27
E	C080169, DWG UPDATE	R.YUAN	2008.10.14

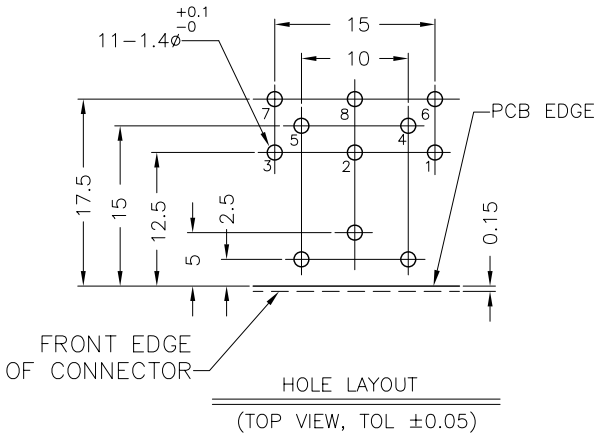

HOLE LAYOUT
(TOP VIEW, TOL ±0.05)

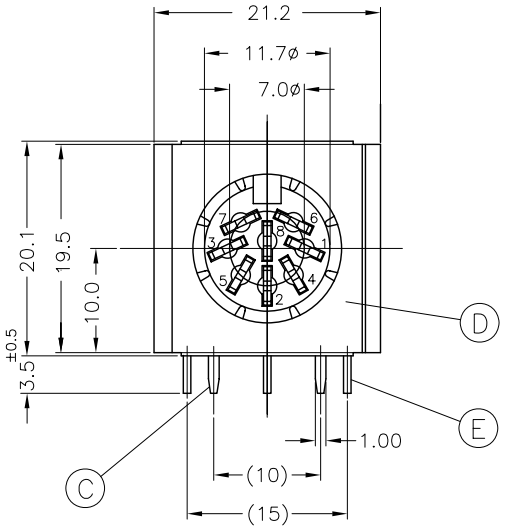

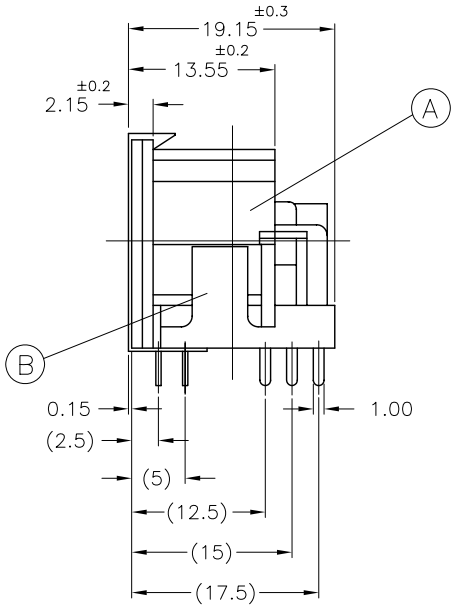

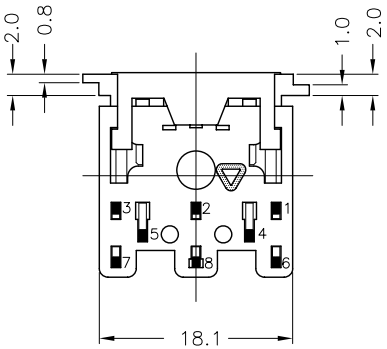

SPECIFICATIONS:

1. CURRENT CARRYING CAPACITY:
   1) AC: 100V 1A MAX.
   2) DC: 24V 2A MAX.
2. CONTACT RESISTANCE:
   1) INITIAL, BEFORE LIFE CYCLE TEST.
      PIN TO CONTACTOR: 20mΩ MAX.
      PLUG SHIELD TO CONNECTOR: 100mΩ MAX.
   2) AFTER LIFE CYCLE TEST.
      PIN TO CONTACTOR: 100mΩ MAX.
      PLUG SHIELD TO CONNECTOR: 150mΩ MAX.
3. INSULATION RESISTANCE:
   BETWEEN ANY ADJACENT OPEN CONTACTS SHALL NOT BE LESS THAN 100MΩ MEASURED AS SPECIFIED AT 500V DC INSULATION RESISTANCE TEST.
4. DIELECTRIC STRENGTH:
   A POTENTIAL OF 500V AC RMS. 50/60HZ SHALL BE APPLIED BETWEEN ANY OPEN CONTACTS FOR ONE MINUTE WITHOUT BREAKDOWN.
5. INSERTION FORCE: 5.0Kg MAX.
6. WITHDRAWAL FORCE: 1.0Kg MIN.
7. LIFE CYCLE TEST:
   CONNECTOR SHALL BE SUBJECT TO 5,000 CYCLES AT 10 TO 20 CYCLES PER MINUTE WITH NO ELECTRICAL LOAD.
8. SOLDER HEAT RESISTANCE: WAVE SOLDERING 260°C 10 SECS.
9. TO CONFORM TO SINGATRON HAZARDOUS SUBSTANCE FREE SPEC.
10. GREEN PRODUCT IDENTIFICATION MARK ON JACK: △
11. GREEN PRODUCT IDENTIFICATION LABEL ON PACKING: **G.P. PASS**
12. FOR WAVE SOLDERING LEAD−FREE PROCESS.

NO	DESCRIPTION	QTY	MATERIAL	PLATING & COLOR
E	CONTACT TERMINAL	8	COPPER ALLOY 0.7t	TIN(L/F) PLATNG
D	SHIELDING PLATE	1	COPPER ALLOY 0.15t	TIN(L/F) PLATNG
C	EARTH TERMINAL	1	COPPER ALLOY 0.25t	TIN(L/F) PLATNG
B	COVER	1	THERMOPLASTIC, UL 94V−0, BLACK	
A	BODY	1	THERMOPLASTIC, UL 94V−0, BLACK	

UNLESS OTHERWISE SPECIFED TOLERANCES

DECIMALS: X :±0.5, X.X :±0.3, X.XX :±0.2
ANGLES: X :±2°, X.X :±1°

Singatron Enterprise Co., Ltd.
信音企業股份有限公司

TITLE	8P 270° DIN CONNECTOR(WITH SHIELD)		
DWN	R.YUAN 2008.10.14	PART NO. 2DJ−0108PSA2	
CHKD		SCALE 1:1	UNIT: mm
APVD	R.LUO 2008.10.14	SIZE: A3	SHEET:1 OF 1 REV: E

CUSTOMER COPY

文件編號 RD−06−043−A