REV.	ECN NO OR DESCRIPTION	REVISED	DATE
A.	PDR NO.T100114-2B	JACY	2010.04.27
B	ECN NO.S100735	Swina	2010.08.23
C	ECN NO.S100932	Swina	2010..09.24
D	ECN NO.S100732	Soldier	2010.12.10

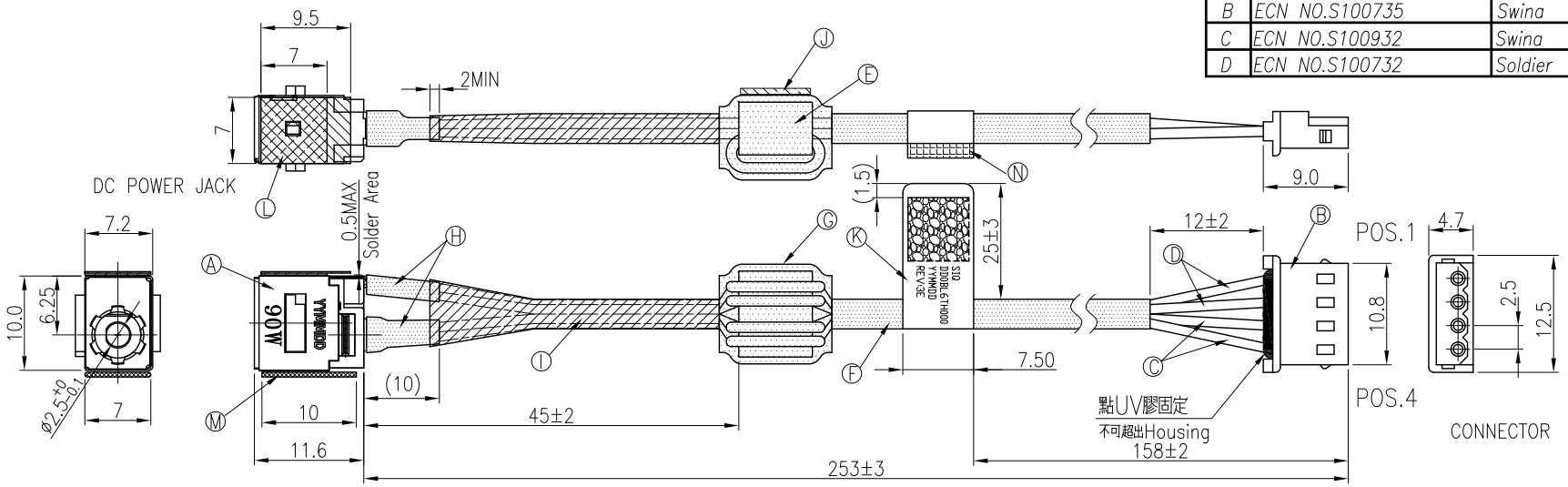

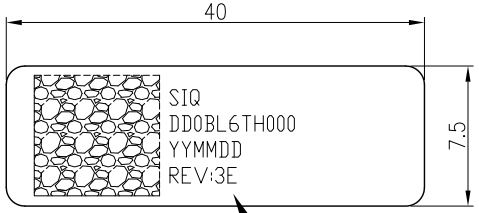

二維碼 第四行版本只需打印在LABLE上,不需顯示在條碼裡

WIRE DIAGRAM		
DC POWER JACK	WIRE COLOR	CONNECTOR
CENTER PIN(+)	RED	POS.(3,4)
SPRING(-)	BLACK	POS.(1,2)

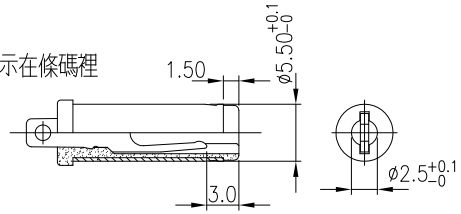

Ø5.5 MATING PLUG

SCHEMATIC

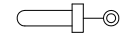

CENTER PIN(+)

SPRING(-)

SPECIFICATIONS:

1.ELECTRICAL CHARACTERISTICS:
- 1-1.RATING:20V 5A
- 1-2.CONTACT RESISTANCE:30mΩ MAX.(INITIAL)
- 1-3.DIELECTRIC WITHSTANDING VOLTAGE:250V AC FOR ONE MINUTE.
- 1-4.INSULATION RESISTANCE:100MΩ MIN. MEASURED BY 500V DC.

2.MECHANICAL CHARACTERISTICS:
- 2-1.INSERTION FORCE: 3.5Kgf MAX.
- 2-2.WITHDRAWAL FORCE: 0.5~3.5Kgf.

3.LIFE TEST:5000 CYCLES MIN.

4.OTHER GENERAL SPEC. TO REFER "2DC-G756-B99 SPEC".

5.TO CONFORM TO SINGATRON HAZARDOUS SUBSTANCE FREE SPEC.

6.HALOGEN FREE PRODUCT IDENTIFICATION MARK ON JACK: ◎

7.HALOGEN FREE PRODUCT IDENTIFICATION LABEL ON PACKAGEING:

NO	DESCRIPTION	QTY	MATERIAL	PLATING & COLOR
N	ADHESIVE TAPE	1	3M 467 L25*W7	WHITE
M	CONDUCTIVE GASKET	1	L10*W7*T0.5	BLACK
L	ADHESIVE TAPE	1	3M 467 L7*W7*T0.05	WHITE
K	LABEL	1	L40*W7.5	WHITE
J	ADHESIVE TAPE	1	3M 9448 7.2*8.5*0.15T	WHITE
I	ACETATE CLOTH TAPE	1	W10*T0.12	BLACK
H	HEAT SHRINK TUBE	2	FOLYOLIFEN ø3.0*10 (125°,300V)	BLACK
G	HEAT SHRINK TUBE	1	FOLYOLIFEN ø10*14(125°,300V)	BLACK
F	HEAT SHRINK TUBE	1	FOLYOLIFEN ø2.5 (125°,300V)	BLACK
E	EMI CORE	1	9.1*5.6*7.8	BLACK
D	WIRE	2	UL10368 26AWG	BLACK
C	WIRE	2	UL10368 26AWG	RED
B	CONNECTOR	4	TER:PHOSPHOR BRONZE	TIN
		1	HSG:NYLON UL94V-0	WHITE
A	DC POWER JACK	1	SINGATRON DC JACK P/N:2DC-G756-B99	

UNLESS OTHERWISE SPECIFED TOLERANCES

DECIMALS: X :±0.5, X.X :±0.3, X.XX :±0.2

ANGLES: X :±2°, X.X :±1°

Singatron Enterprise Co., Ltd.
信音企業股份有限公司

TITLE	DC POWER JACK + WIRE			
DWN	Soldier	PART NO.2DW-G756-BJ6		
CHKD	Lussen	SCALE: 2:1	UNIT: mm	
APVD	Tony	SIZE: A3	SHEET:1 OF 1	REV:D

CUSTOMER COPY

文件編號 RD-06-043-A