REV.	ECN NO OR DESCRIPTION	REVISED	DATE
A	PDR NO.: T110726-7A	Eileen	2012.04.27
B	ECN NO.: S121219	SpringWang	2013.03.01
C	ECN NO.: S121262	SpringWang	2013.03.20

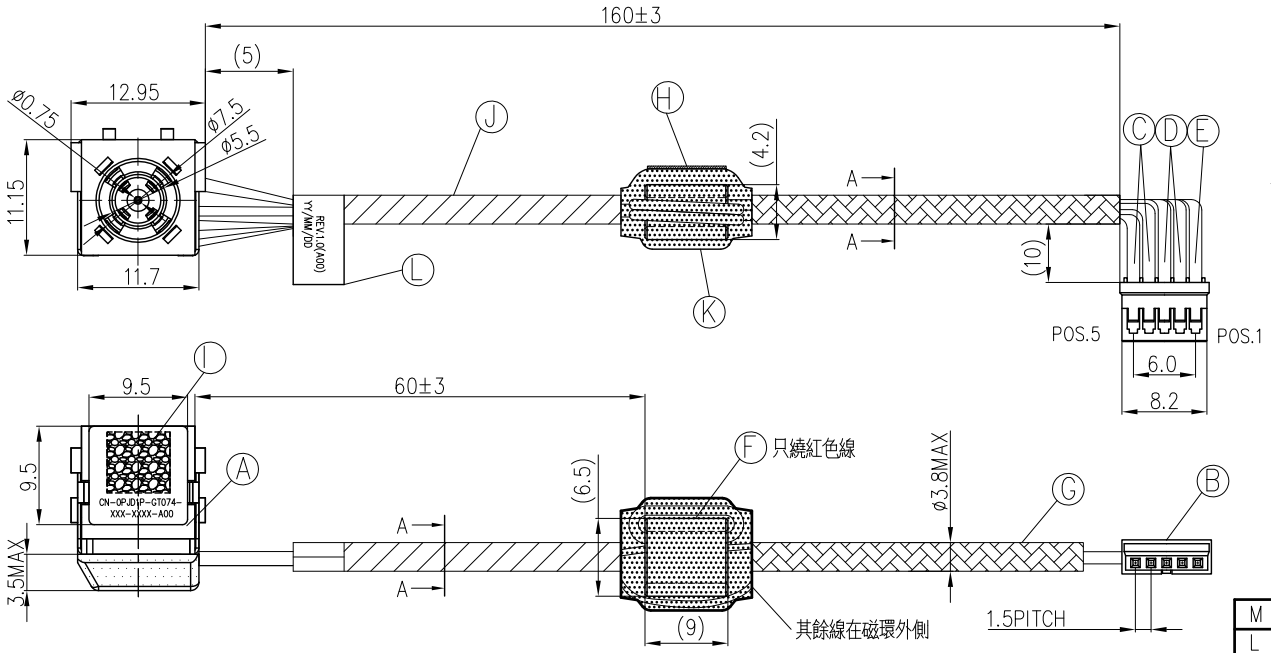

SPECIFICATIONS:

1.ELECTRICAL CHARACTERISTICS:
- 1-1.RATING: 20V 7A
- 1-2.CONTACT RESISTANCE: 30mΩ MAX.(INITIAL)(ONLY FOR DC JACK)
- 1-3.DIELECTRIC WITHSTANDING VOLTAGE: 500V AC FOR ONE MINUTE.
- 1-4.INSULATION RESISTANCE: 100MΩMIN. MEASURED BY 500V DC.

2.MECHANICAL CHARACTERISTICS:
- 2-1.INSERTION FORCE: 3.0 MAX Kgf.
- 2-2.WITHDRAWAL FORCE: 0.4 MIN Kgf.

3.LIFE TEST: 5000 CYCLES Min.

4.OTHER GENERAL SPEC. TO REFER "2DC2018-003111F SPEC".

5.TO CONFORM TO SINGATRON HAZARDOUS SUBSTANCE FREE SPEC.

6. HALOGEN FREE PRODUCT IDENTIFICATION MARK ON JACK:

7. HALOGEN FREE PRODUCT IDENTIFICATION LABEL ON PACKAGING:

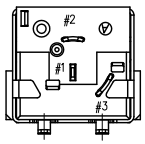

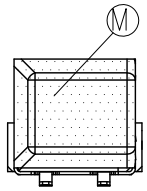

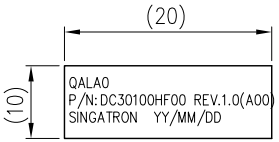

LABEL

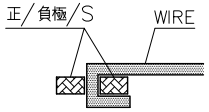

正負極勾焊方式

DETAIL A

STECTION A-A

CONNECTOR	WIRE COLOR	DC POWER JACK
POS 5	RED(UL10368 24AWG)	#2 SPRING (+)
POS 4	RED(UL10368 24AWG)	
POS 3	BLACK(UL10368 24AWG)	#3 SPRING (−)
POS 2	BLACK(UL10368 24AWG)	
		SHELL (GND)
POS 1	BLUE(UL10368 28AWG)	#1 SIGNAL (S)

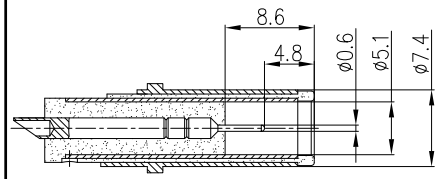

MATING PLUG: (TOLERANCE: ±0.05)

NO	DESCRIPTION	QTY	MATERIAL	PLATING & COLOR
M	MACROMELT	0.5g	MACROMELT 6208	AMBER
L	LABEL	1	L20*W10	WHITE
K	HEAT SHRINK TUBE	1	POLYOLEFIN ø8.0 (125° 300V)	BLACK
J	ACETATE CLOTH TAPE	1	W15*T0.12	BLACK
I	DELL PPID LABEL	1	9.5*9.5 (TYPE W)	WHITE
H	ADHESIVE TAPE	1	3M 9448 L7*W7	WHITE
G	HEAT SHRINK TUBE	1	POLYOLEFIN ø3.0 (125° 300V)	BLACK
F	CORE	1	Model: NiMoZn-600 Size: 9.0mm*6.5mm*4.2mm Model: NiMoZn-600 Size: 9.0mm*6.5mm*4.2mm	BLACK
E	WIRE	1	UL10368 28AWG	BLUE
D	WIRE	2	UL10368 24AWG	BLACK
C	WIRE	2	UL10368 24AWG	RED
B	CONNECTOR	5	TER: COPPER ALLOY	TIN-PLATED
		1	HSG: NYLON UL94V-0	WHITE
A	DC JACK	1	SINGATRON DC JACK P/N: 2DC2018-003111F	

UNLESS OTHERWISE SPECIFED TOLERANCES

DECIMALS: X : ±0.5, X.X : ±0.3, X.XX : ±0.2

ANGLES: X : ±2°, X.X : ±1°

Singatron Enterprise Co., Ltd.
信音企業股份有限公司

TITLE	DC JACK WITH WIRE		
DWN	SpringWang	PART NO.2DW2018-004111F	
CHKD	Cerry	SCALE: --	UNIT: mm
APVD	MAX	SIZE: A3	SHEET: 1 OF 1
			REV:C

CUSTOMER COPY

文件編號RD-06-043-A