REV.	ECN NO OR DESCRIPTION	REVISED	DATE
A	PDR NO.:T160604-2A	Springwu	2016.08.30
B	ECN NO.:S181114-C B	Jie	2018.11.06

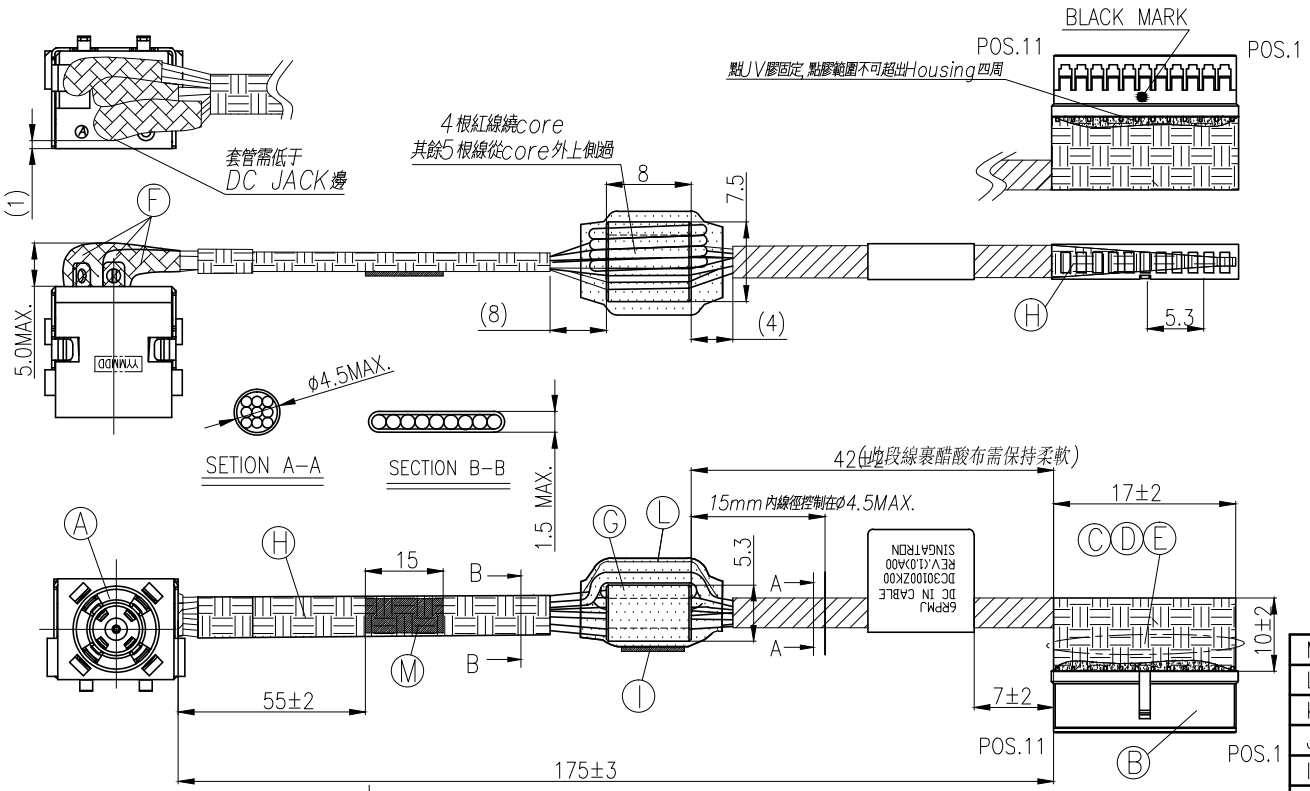

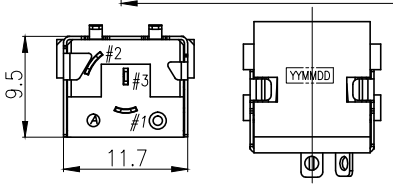

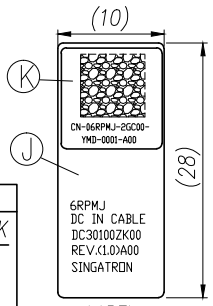

LABEL

	DC JACK	HOUSING	CABLE
RATING VOLTAGE (V)	20V	50V	20V
RATING CURRENT (A)	13A	3A Per Pin	12A
OPERATION TEMPERTURE(℃) RANGE(℃)	-10 ~ 85	-25 ~ 85	105
插入力 (KG)	3.0 MAX.		
拔出力 (KG)	0.4 MIN.		

WIRE DIAGRAM

CONNECTOR	WIRE COLOR	DC POWER JACK
POS.1		N/A
POS.2	RED (26AWG)	SPRING (+) (#1)
POS.3	RED (26AWG)	
POS.4	RED (26AWG)	
POS.5	RED (26AWG)	
POS.6	BLACK (26AWG)	SPRING (-) (#2)
POS.7	BLACK (26AWG)	
POS.8	BLAVK (26AWG)	
POS.9	BLAVK (26AWG)	
POS.10	BLUE (26AWG)	SIGNAL (S) (#3)
POS.11		N/A

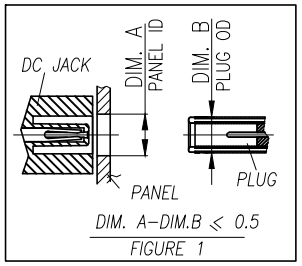

FIGURE 1

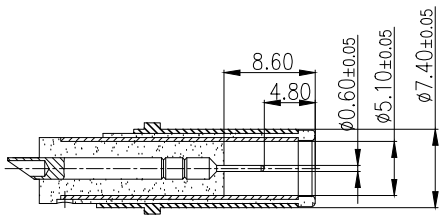

MATING PLUG

SPECIFICATIONS:

1. DC POWER JACK AND WIRE SPEC:
   1-1.RATING:20V/12A;
   1-2.CONTACT RESISTANCE:30mΩ MAX.(INITIAL)(ONLY FOR DC JACK);
   1-3.CONTACT RESISTANCE:20mΩ MAX.(INITIAL)(ONLY FOR HOUSING);
   1-4.CONTACT RESISTANCE:10mΩ MAX.(INITIAL)(ONLY FOR CABLE);
   1-5.DIELECTRIC WITHSTANING VOLTAGE:500V AC FOR ONE MINUTR.
   1-6.INSULATION RESISTANCE:100MΩ MIN. MEASURED BY 500V DC.
2. MECHANICAL CHARACTERISTICS:
   2-1. INSERTION FORCE : 3.0 KGF Max.
   2-2. WITHDRAWAL FORCE : 0.40 KGF Min.
3. LIFE TEST: 5,000 CYCLES MIN.
4. OTHER GENERAL SPEC. TO REFER "2DW2018-039111F&040111F SPEC".
5. TO CONFORM TO SINGATRON HAZARDOUS SUBSTANCE FREE SPEC.
6. HALOGEN FREE PRODUCT IDENTIFICATION MARK ON JACK: ◎
7. HALOGEN FREE PRODUCT IDENTIFICATION LABEL ON PACKAGING:
8. FOR HAND SOLDERING LEAD-FREE PROCESS.
9. THE PANEL'S ID MUST BE GREATER THAN THE PLUG'S OD WHICH MUST HAVE A DIFFERENCE OF LESS THAN OR EQUAL TO 0.5 mm.(AS SHOWN IN FIGURE 1.)

NO	DESCRIPTION	QTY	MATERIAL	PLATING & COLOR
M	AEHESIVE TAPE	1	L15*W8	WHITE
L	HEAT SHRINK TUBE	1	FOLYOLIFEN ø10(125° 300V)	BLACK
K	PPID LABEL B	1	9.5*9.5	WHITE
J	LABEL	1	L28*W10	WHITE
I	AEHESIVE TAPE	1	5*6	WHITE
H	ACETATE FABRIC	4	T:0.12	BLACK
G	CORE	1	Mode: NiMoZn-600 Size: 7.5*5.3*8 Manufacturer: SINCORES ELECTRONICS(D.G)CORP.	BLACK
F	HEAT SHRINK TUBE	3	POLYOLEFIN ø4&ø2.5(125° 300V)	BLACK
E	WIRE	1	UL10368 26AWG	BLUE
D	WIRE	4	UL10368 26AWG	BLACK
C	WIRE	4	UL10368 26AWG	RED
B	CONNECTOR (TYU_T1502 SERIES)	9	TER:COPPER ALLOY	GOLD FLASH
		1	HSG:THERMOPLASTIC UL94V-0	WHITE
A	DC JACK	1	SINGATRON DC JACK P/N:2DC2018-006111F	

UNLESS OTHERWISE SPECIFED TOLERANCES

DECIMALS: X :±0.5, X.X :±0.3, X.XX :±0.2

ANGLES: X :±2°, X.X :±1°

Singatron Enterprise Co., Ltd.
信音企業股份有限公司

TITLE	DC JACK WITH WIRE		
DWN	Jie	PART NO.2DW2018-040111F	
CHKD		SCALE:--	UNIT: mm
APVD		SIZE: A3	SHEET:1 OF 1 REV:B

CUSTOMER COPY

文件編號 RD-06-043-A