REV.	ECN NO OR DESCRIPTION	REVISED	DATE
A	PDR NO. T150410-1A	Ron	2016.03.31

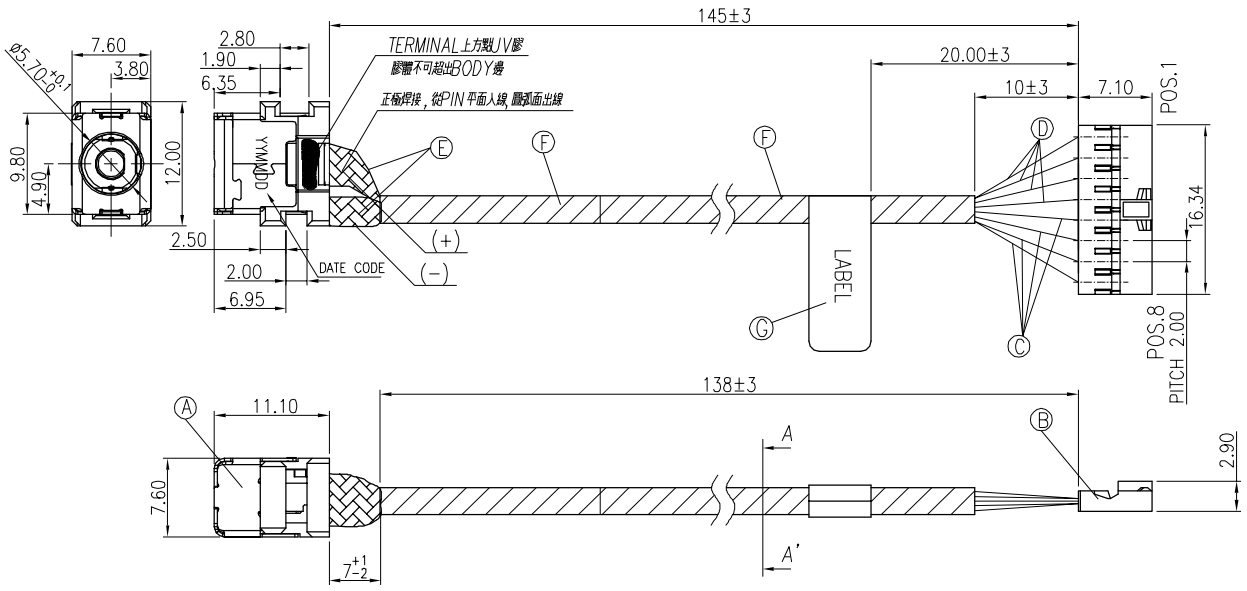

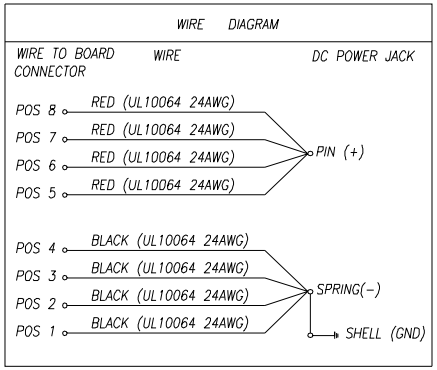

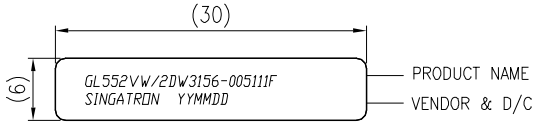

LABEL

SPECIFICATIONS:

1.DC POWER JACK ADD WIRE AND WIRE TO BOARD CONNECTOR
  1-1.RATING:20V 10A
  1-2.TEMPERATURE RISE : THE TEMPERATURE RISE SHALL NOT EXCEED 30 DEGREE C
  1-3.VOLTAGE DROP ; THE VOLTAGE DROP SHALL NOT EXCEED 60mV.
2.DC POWER JACK-p/n:2DC3156-000111F
  2-1.RATING:20V 10A
  2-2.CONTACT RESISTANCE:15mΩMAX.(INITIAL / AFTER LIFE TEST)
  2-3.DIELECTRIC WITHSTANING VOLTAGE:500V AC FOR ONE MINUTR.
  2-4.INSULATION RESISTANCE:100MΩMIN. MEASURED BY 500V DC.
  2-5.INSERTION FORCE:0.8~2.0 Kgf. (INITIAL / AFTER LIFE TEST)
  2-6.WITHDRAWAL FORCE:0.8~2.0 Kgf. (INITIAL / AFTER LIFE TEST)
  2-7.LIFT TEST:8000 CYCLES MIN.
3.WIRE TO BOARD CONNECTOR - VENDER : ACES, p/n:50303
  3-1.RATING CURRENT : 3 A/PER PIN(AWG 26 OR MORE)
4.OTHER GENERAL SPEC. TO REFER "2DW3156-005111F SPEC".
5.TO CONFORM TO SINGATRON HAZARDOUS SUBSTANCE FREE SPEC.
6. HALOGEN FREE PRODUCT IDENTIFICATION MARK ON PRODUCT:
7. HALOGEN FREE PRODUCT IDENTIFICATION LOGO ON PACKAGING:
8. PRINTED DATE CODE" YYMMDD " ON TOP OF CONNECTOR.
  DATE CODE:YYMMDD (YY:YEAR MM:MONTH DD:DAY)

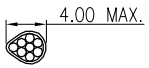

SECTIONA-A'

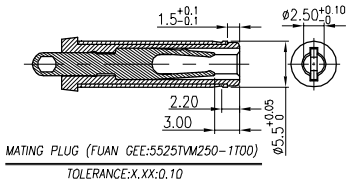

NO	DESCRIPTION	QTY	MATERIAL	PLATING & COLOR
G	LABEL	1	L30*W6	WHITE
F	ACETATE TAPE	8	W15*T0.12	BLACK
E	HEAT SHRINK TUBE	2	Ø3.5*6.0(125°,300V)	BLACK
D	WIRE	4	UL10064 24AWG	BLACK
C	WIRE	4	UL10064 24AWG	RED
B	CONNECTOR (ACES 50303)	8	PHOSPHOR BRONZE	GOLD FLASH
		1	NYLON66 UL94V-0	WHITE
A	DC POWER JACK	1	TO SEE SINGATRON DC JACK P/N:2DC3156-000111F	

UNLESS OTHERWISE SPECIFED TOLERANCES

DECIMALS: X :±0.5, X.X :±0.3, X.XX :±0.2

ANGLES: X :±2°, X.X :±1°

Singatron Enterprise Co., Ltd.
信音企業股份有限公司

TITLE	DC JACK CABLE		
DWN	Ron	PART NO.2DW3156-005111F	
CHKD	Sky	SCALE:--	UNIT: mm
APVD	Lussen	SIZE: A3	SHEET:1 OF 1 REV:A

CUSTOMER COPY

文件編號 RD-06-043-A