REV.	ECN NO OR DESCRIPTION	REVISED	DATE
A	PDR NO. T200318-1B	Vincent	2020.04.20
B	ECN NO. S202203-R08	Elrod	2022.03.09

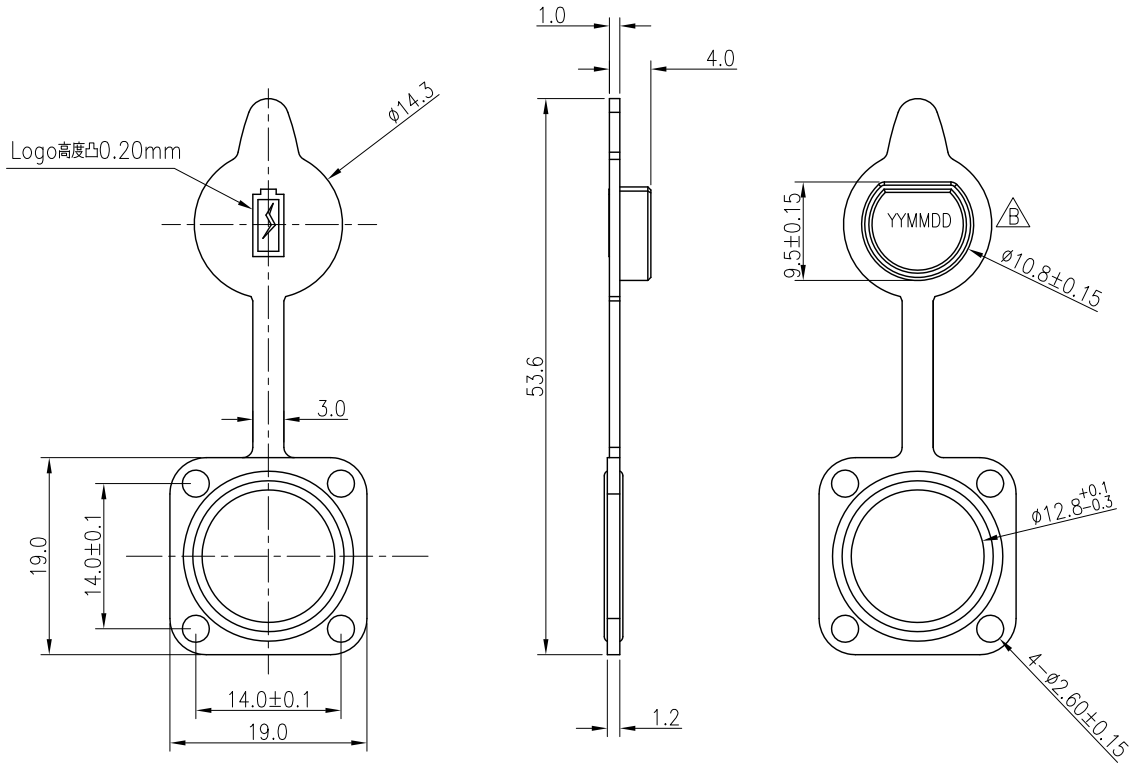

SPECIFICATIONS:

1. *TO CONFORM TO SINGATRON HAZARDOUS SUBSTANCE FREE SPEC.*
2. *GREEN PRODUCT IDENTIFICATION LABEL ON PACKAGING:* G.P. PASS
3. LASE DATE CODE "YYMMDD" ON TOP OF CHAIN.

B DATE CODE: YYMMDD
- DAY
- MONTH
- YEAR

NO	DESCRIPTION	QTY	MATERIAL	PLATING & COLOR
A	CAP	1	SILICONE	BLACK

UNLESS OTHERWISE SPECIFED TOLERANCES

DECIMALS: X :±0.5, X.X :±0.3, X.XX :±0.2

ANGLES: X :±2°, X.X :±1°

Suzhou Singatron Auto Electronics CO.,LTD.
蘇州信音汽車電子有限公司

TITLE	DUST CAP			
DWN	Elrod	PART NO. 2EB3010-W0000D		
CHKD	Jun	SCALE 2:1	UNIT: mm	
APVD	Steve	SIZE: A3	SHEET:1 OF 1	REV: B

CUSTOMER COPY

文件編號:RD-06-043-A