REV.	ECN NO OR DESCRIPTION	REVISED	DATE
A	PDR RELEASE	IVY-C	2012.01.17
B	ECN NO:L120052	IVY-C	2012.05.03

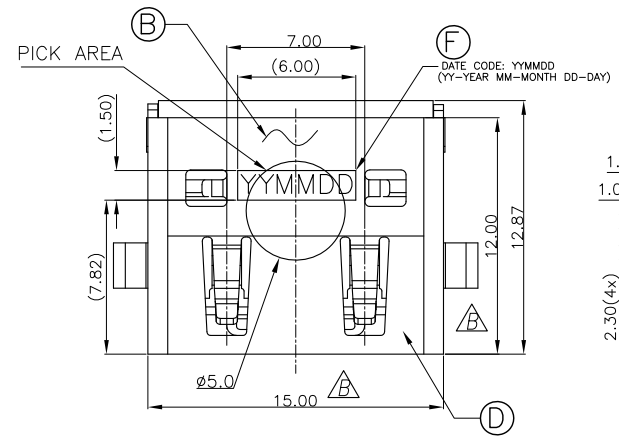

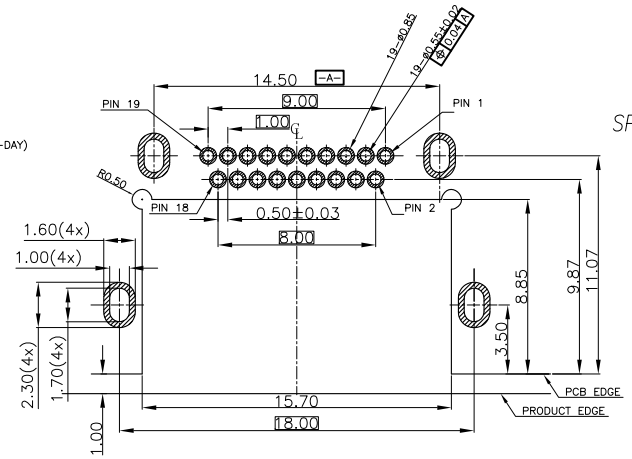

RECOMMENDED PCB LAYOUT(TOP VIEW)
(THICKNESS=1.2±0.10mm)
(TOLERANCE=±0.05mm)

SPECIFICATIONS:

1. ELECTRICAL CHARACTERISTICS:
   1-1. CURRENT RATING: 0.5 AMP.
   1-2. VOLTAGE RATING: 40V.
   1-3. CONTACT RESISTANCE: 30mΩ MAX.
   1-4. INSULATION RESISTANCE: 100MΩ MIN. @ 500V DC.
   1-5. DIELECTRIC WITHSTANDING VOLTAGE: 500V AC FOR 1 MINUTE.
2. MECHANICAL CHARACTERISTICS:
   2-1. INSERTION FORCE: 4.5Kgf MAX.
   2-2. WITHDRAWAL FORCE: 1.0~4.0Kgf.
3. LIFE TEST: 10,000 CYCLES.
4. OTHER GENERAL SPEC. TO REFER "HDMI SERIES SPEC".
5. TO CONFORM TO THE SINGATRON HAZARDOUS SUBSTANCE FREE SPEC.
6. HALOGEN FREE PRODUCT IDENTIFICATION LABEL ON PACKAGING:
7. PACKAGE: SEE "2HE1630 SERIES" PACKAGE.
8. FOR REFLOW SOLDERING LEAD-FREE PROCESS.

PART NO.

2HE1630-000111F

- SUFFIX: HALOGEN FREE
- PACKAGE
  1: TAPE AND REEL
- HOUSING COLOR
  1: BLACK
- CONTACT PLATING
  1: GOLD FLASH ON CONTACT AREA,
  MATTE TIN ON SOLDER AREA.

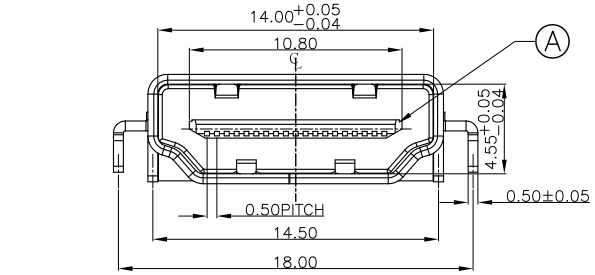

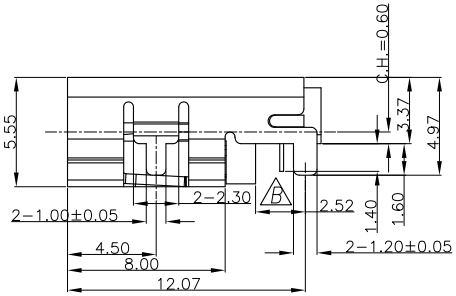

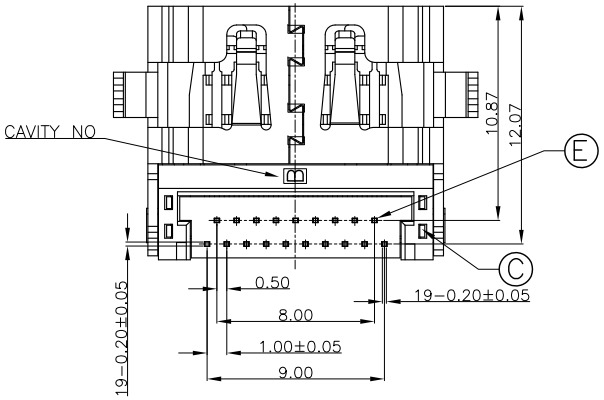

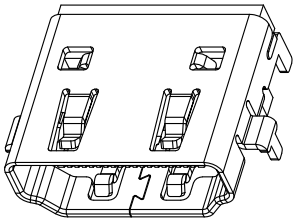

3D VIEW(REF.)

NO	DESCRIPTION	QTY	MATERIAL	PLATING & COLOR
F	INK	1		BLACK
E	CONTACT	19	COPPER ALLOY	SEE PART NO.
D	SHELL	1	COPPER ALLOY	NICKEL
C	BOTTOM COVER	1	HIGH TEMP. THERMOPLASTIC UL 94V-0	BLACK
B	TOP COVER	1	HIGH TEMP. THERMOPLASTIC UL 94V-0	BLACK
A	HOUSING	1	HIGH TEMP. THERMOPLASTIC UL 94V-0	BLACK

UNLESS OTHERWISE SPECIFIED TOLERANCES

DECIMALS: X :±0.5, X.X :±0.3, X.XX :±0.2

ANGLES: X :±2°, X.X :±1°

Singatron Enterprise Co., Ltd.
信音企業股份有限公司

TITLE	HDMI A TYPE FEMALE, SINKING, C.H=0.60mm		
DWN	IVY-C 2012.05.03	PART NO. 2HE1630-000111F	
CHKD	DAVID-T 2012.05.03	SCALE 4/1	UNIT: mm
APVD	DAVID-T 2012.05.03	SIZE: A3	SHEET:1 OF 1	REV: B

CUSTOMER COPY

文件編號 RD-06-043-A