REV.	ECN NO OR DESCRIPTION	REVISED	DATE
A	PDR RELEASE	IVY-C	2012.10.05

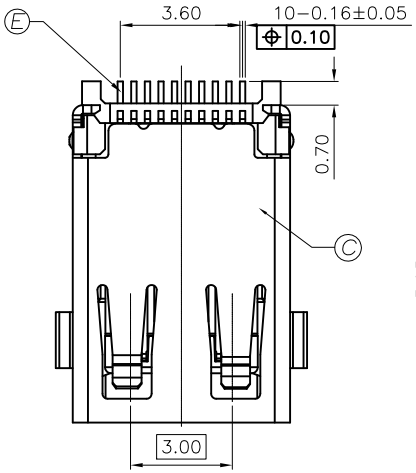

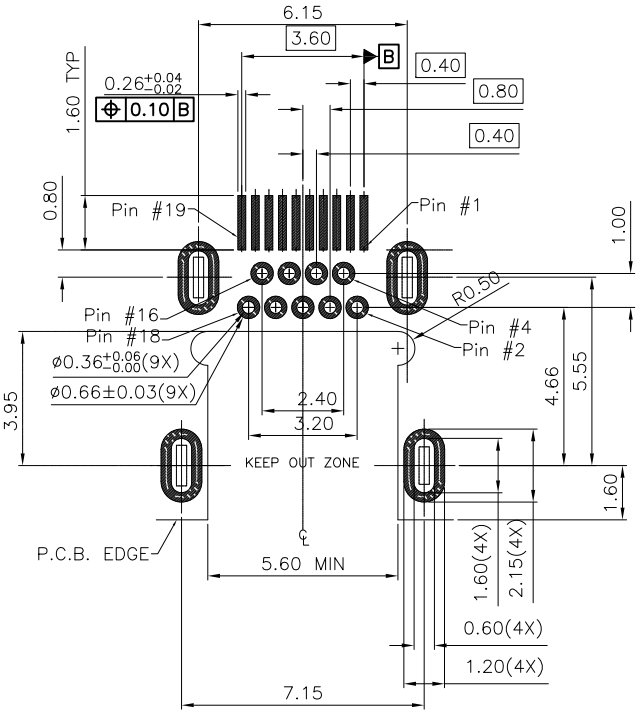

RECOMMENDED P.C.B. LAYOUT (T:1.0mm)

TOLERANCE UNSPECIFIED ±0.05mm

SPECIFICATIONS:

1. ELECTRICAL CHARACTERISTICS:
   1-1. CURRENT RATING: 0.3 AMP.
   1-2. VOLTAGE RATING: 40V.
   1-3. INITIAL CONTACT RESISTANCE EXCLUDING CONDUCTOR RESISTANCE: 10mΩ MAX (TARGET DESIGN VALUE). AFTER TEST: △30mΩ MAX.
   1-4. INSULATION RESISTANCE: 100MΩ MIN. @ 500V DC.
   1-5. DIELECTRIC WITHSTANDING VOLTAGE: 250V AC FOR 1 MINUTE.
2. MECHANICAL CHARACTERISTICS:
   2-1. INSERTION FORCE: 4.5Kgf MAX.
   2-2. WITHDRAWAL FORCE: 0.5~2.5Kgf.
3. LIFE TEST: 5,000 CYCLES
4. OTHER GENERAL SPEC. TO REFER "HDMI SERIES SPEC".
5. TO CONFORM TO THE SINGATRON HAZARDOUS SUBSTANCE FREE SPEC.
6. HALOGEN FREE PRODUCT IDENTIFICATION LABEL ON PACKAGING:
7. PACKAGE: SEE "2HE1640 SERIES" PACKAGE.
8. FOR REFLOW SOLDERING LEAD-FREE PROCESS.

PART NO.
2HE1640-000111F

- SUFFIX: HALOGEN FREE
- PACKAGE
  1: TAPE AND REEL
- HOUSING COLOR
  1: BLACK
- CONTACT PLATING
  1: GOLD FLASH ON CONTACT AREA, 120u" MATTE TIN PLATING ON SOLDER AREA. 50u" NI UNDERPLATED OVERALL.

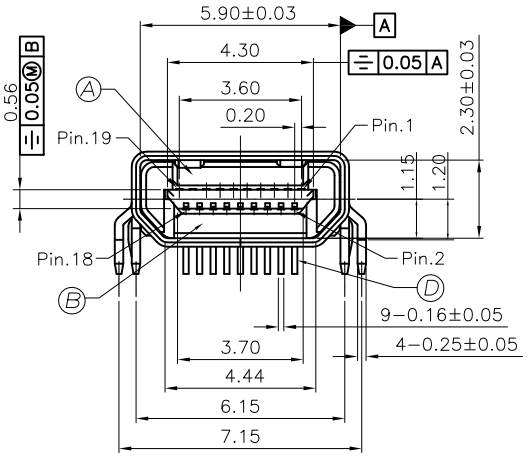

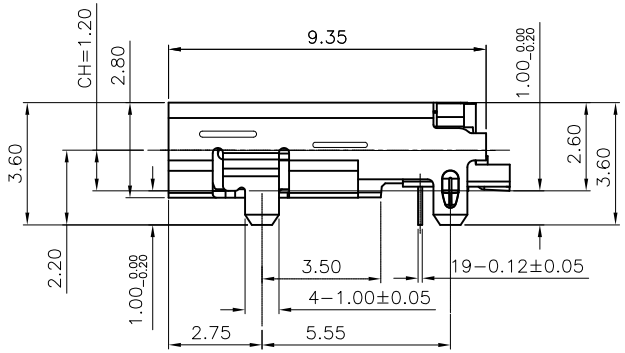

NO	DESCRIPTION	QTY	MATERIAL	PLATING & COLOR
E	TOP CONTACT-SMT	10	COPPER ALLOY	SEE PART NO.
D	BOTTOM CONTACT-DIP	9	COPPER ALLOY	SEE PART NO.
C	SHELL	1	STAINLESS STEEL	NICKEL
B	BOTTOM INSULATOR	1	HIGH TEMP. THERMOPLASTIC, UL 94V-0	BLACK
A	TOP INSULATOR	1	HIGH TEMP. THERMOPLASTIC, UL 94V-0	BLACK

UNLESS OTHERWISE SPECIFIED TOLERANCES

Singatron Enterprise Co., Ltd.
信音企業股份有限公司

DECIMALS: X :±0.5, X.X :±0.3, X.XX :±0.2

ANGLES: X :±2°, X.X :±1°

TITLE	HDMI TYPE D FEMALE, DIP+SMT TYPE, CH=1.20		
DWN	IVY-C 2012.10.05	PART NO. 2HE1640-000111F	
CHKD	DAVID-T 2012.10.05	SCALE6.7:1	UNIT: mm
APVD	DAVID-T 2012.10.05	SIZE: A3	SHEET:1 OF 1 REV: A

CUSTOMER COPY

文件編號 RD-06-043-A