REV.	ECN NO OR DESCRIPTION	REVISED	DATE
A	PDR NO.:T120430-2A	Soldier	2012.10.28
B	ECN NO.:S130435	YUREN	2013.08.13
C	ECN NO.:S141128	YUREN	2015.01.28

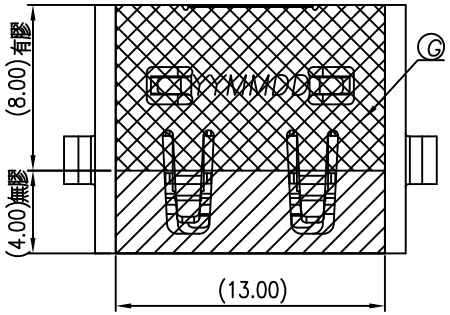

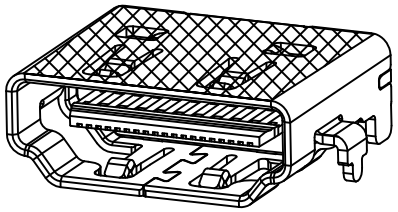

3D VIEW

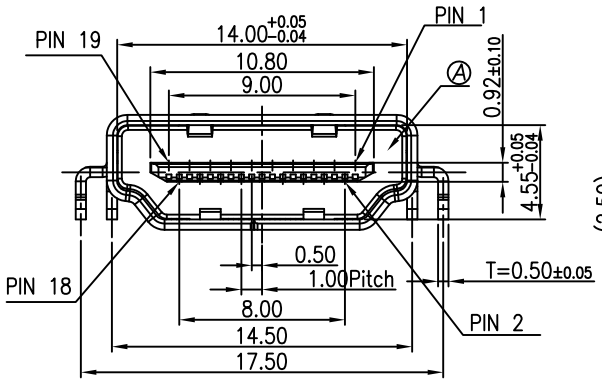

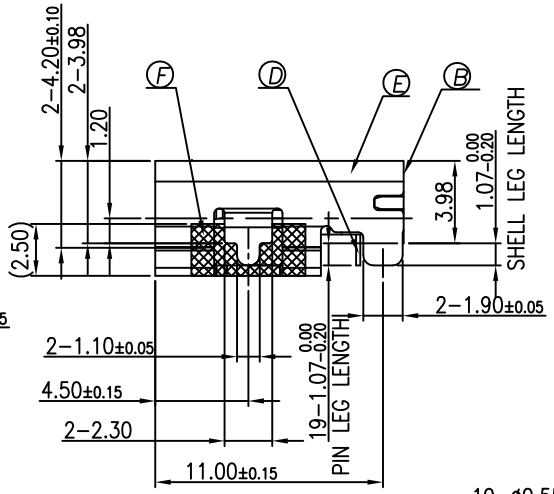

SPECIFICATIONS:

1. ELECTRICAL CHARACTERISTICS:
   1-1. CURRENT RATING: 0.5A
   1-2. VOLTAGE RATING: 40V
   1-3. CONTACT RESISTANCE: 10mohm MAX.(INITIAL)
   1-4. DIELECTRIC WITHSTANDING VOLTAGE: 500V AC FOR ONE MINUTE
   1-5. INSULATION RESISTANCE: 100Mohm MIN. MEASURED BY 500 VDC
2. MECHANICAL CHARACTERISTICS:
   2-1. INSERTION FORCE : 4.5KGF MAX.
   2-2. WITHDRAWAL FORCE : 1~4.0 KGF
3. LIFE TEST: 10,000 CYCLES MIN.
4. OTHER GENERAL SPEC. TO REFER"2HE1664-000111F_SPEC"
5. TO CONFORM TO SINGATRON HAZARDOUS SUBSTANCE FREE SPEC.
6. HALOGEN FREE PRODUCT IDENTIFICATION LABEL ON PACKAGING:
7. FOR REFLOW SOLDERING LEAD-FPEE PROCESS.
8. PART NO. 2HE1664-000111F
   - SUFFIX:HALOGEN FREE
   - PACKAGE
     1:TAPE & REEL
   - HOUSING COLOR
     1: BLACK
   - CONTACT PLATING
     1: GOLD FLASH ON CONTACT AREA,

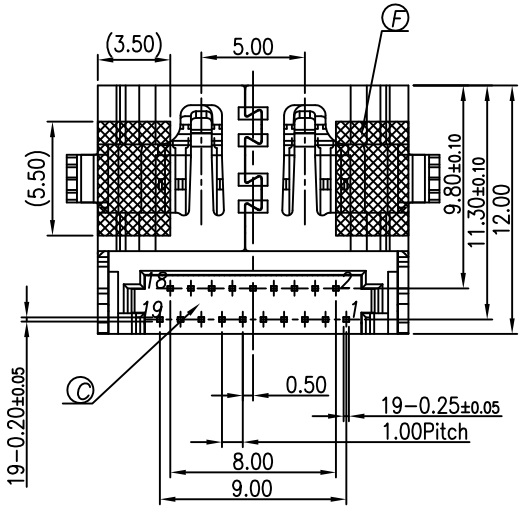

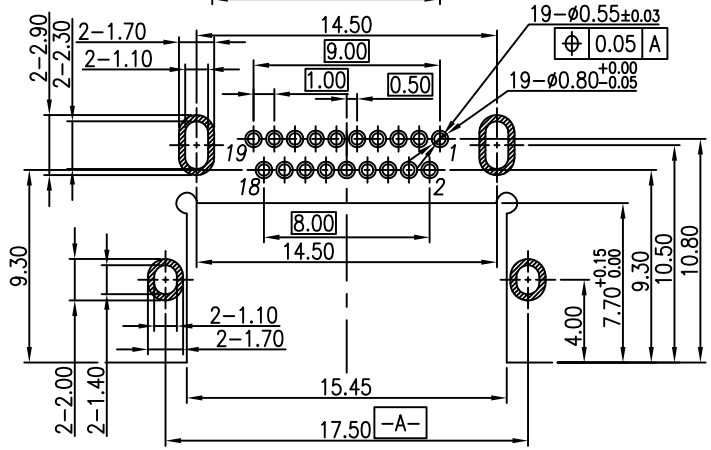

RECOMMENDED PCB LAYOUT (TOP VIEW)
(THICKNESS=1.2±0.10mm)
(TOLERANCE=±0.03mm)

NO	DESCRIPTION	QTY	MATERIAL	PLATING & COLOR
G	MYLAR	1	Kapton	YELLOW
F	MYLAR	2		YELLOW
E	SHELL	1	STAINLESS STEEL,T=0.50	NICKEL 50~100u"
D	TERMINAL	19	COPPER ALLOY,T=0.20	CONTACT AREA: GOLD FLASH SOLDER AREA: GOLD FLASH ALL OVER Ni 50u"MIN.
C	BOTTOM COVER	1	HIGH TERP. THERMOPLASTIC HF, UL94V-0	BLACK
B	TOP COVER	1		
A	HOUSING	1		

UNLESS OTHERWISE SPECIFED TOLERANCES

DECIMALS: X :±0.5, X.X :±0.3, X.XX :±0.2

ANGLES: X :±2°, X.X :±1°

Singatron Enterprise Co., Ltd.
信音企業股份有限公司

TITLE	HDMI TYPE A FEMALE DIP TYPE SINKING, C.H.=1.20mm		
DWN	YUREN	PART NO. 2HE1664-000111F	
CHKD	Cerry	SCALE:4:1	UNIT: mm
APVD	Liao	SIZE: A3	SHEET:1 OF 1 REV:C

CUSTOMER COPY

文件編號:RD-06-043-A