REV.	ECN NO OR DESCRIPTION	REVISED	DATE
A	PDR RELEASE	IVY-C	2014.03.26

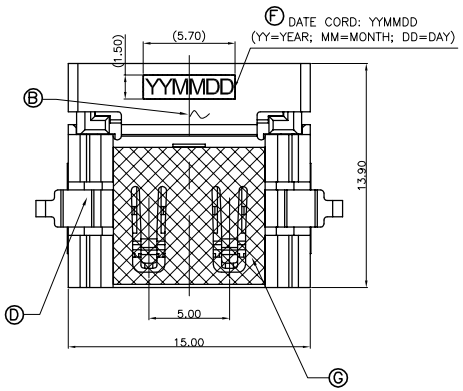

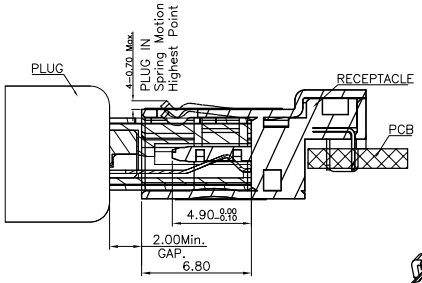

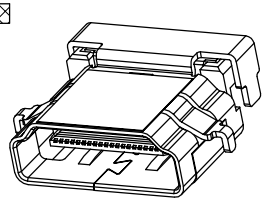

3D VIEW

SPECIFICATIONS:

1. ELECTRICAL CHARACTERISTICS:
   - 1-1. CURRENT RATING: 0.5 AMP.
   - 1-2. VOLTAGE RATING: 40V.
   - 1-3. INITIAL CONTACT RESISTANCE EXCLUDING CONDUCTOR RESISTANCE: 10mΩ MAX (TARGET DESIGN VALUE). AFTER TEST: △ 30mΩ MAX.
   - 1-4. INSULATION RESISTANCE: 100MΩ MIN. @ 500V DC.
   - 1-5. DIELECTRIC WITHSTANDING VOLTAGE: 500V AC FOR 1 MINUTE.
2. MECHANICAL CHARACTERISTICS:
   - 2-1. INSERTION FORCE: 4.5Kgf MAX.
   - 2-2. WITHDRAWAL FORCE: 1.0~4.0Kgf.
3. LIFE TEST: 10,000 CYCLES.
4. OTHER GENERAL SPEC. TO REFER "HDMI SERIES SPEC".
5. TO CONFORM TO THE SINGATRON HAZARDOUS SUBSTANCE FREE SPEC.
6. HALOGEN FREE PRODUCT IDENTIFICATION LABEL ON PACKAGING:
7. PACKAGE: SEE "2HE1670-010111F" PACKAGE.
8. FOR REFLOW SOLDERING LEAD-FREE PROCESS.

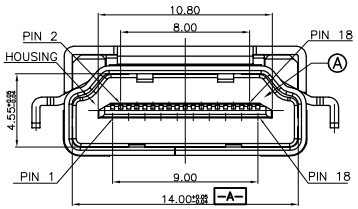

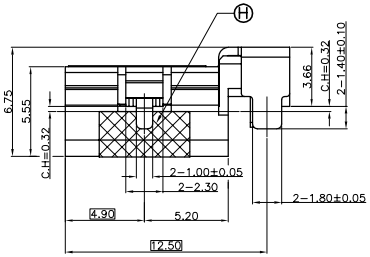

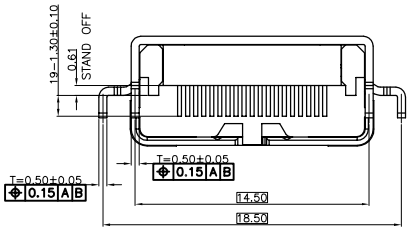

PART NO.
2HE1670-010111F

- CONTACT & SHELL TALL LENGTH
  - 1: CONTACT:1.30mm SHELL:1.40mm
- SUFFIX: HALOGEN FREE
- PACKAGE
  - 1: TAPE AND REEL
- HOUSING COLOR
  - 1: BLACK
- CONTACT PLATING
  - 1: GOLD FLASH ON CONTACT AREA, GOLD FLASH ON SOLDER AREA, NICKEL UNDERPLATED OVERALL.

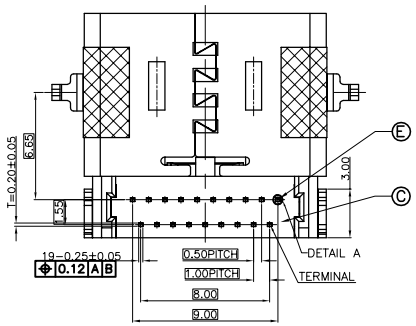

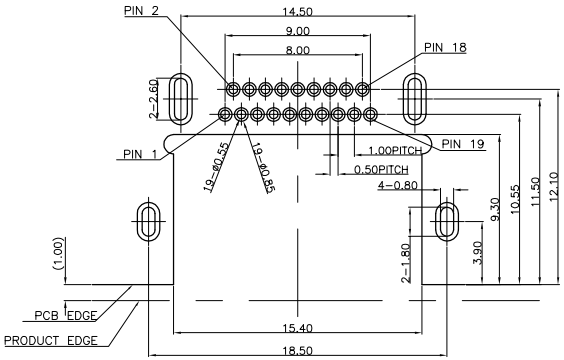

RECOMMENDED PCB LAYOUT(TOP VIEW)
(THICKNESS=1.2±0.10mm)
(TOLERANCE=±0.03mm)

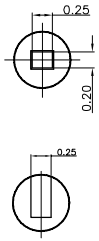

DETAIL A
SCALE 5:1

NO	DESCRIPTION	QTY	MATERIAL	PLATING & COLOR
H	SIDE MYLAR	2	KAPTON FILM	YELLOW
G	TOP MYLAR	1	KAPTON FILM	YELLOW
F	INK	1		BLACK
E	CONTACT	19	C2680	SEE PART NO.
D	SHELL	1	SUS304	NICKEL
C	BOTTOM COVER	1	LCP UL 94V-0	BLACK
B	TOP COVER	1	LCP UL 94V-0	BLACK
A	HOUSING	1	LCP UL 94V-0	BLACK

UNLESS OTHERWISE SPECIFIED TOLERANCES

Singatron Enterprise Co., Ltd.
信音企業股份有限公司

DECIMALS: X :±0.5, X.X :±0.3, X.XX :±0.2
ANGLES: X :±2°, X.X :±1°

TITLE	HDMI A TYPE FEMALE, REVERSE, SINKING, C.H=0.32mm		
DWN	IVY-C 2014.03.26	PART NO. 2HE1670-010111F	
CHKD		SCALE3.7:1	UNIT: mm
APVD	ANGELA2014.03.26	SIZE: A3	SHEET:1 OF 1	REV: A

CUSTOMER COPY

文件編號 RD-06-043-A