REV.	ECN NO OR DESCRIPTION	REVISED	DATE
B	ECN NO:L140102	IVY-C	2014.09.12
C	ECN NO:L170023	EVEN	2017.03.22
D	ECN NO:L170055/62	EVEN	2017.06.22

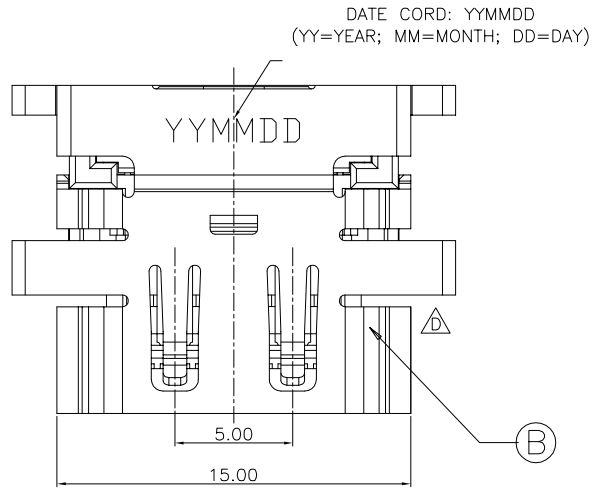

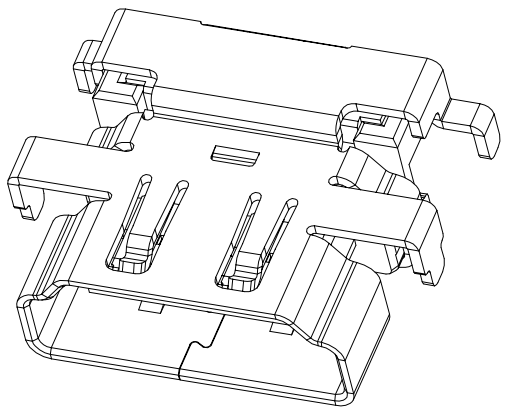

SPECIFICATIONS:

1. ELECTRICAL CHARACTERISTICS:
   - 1-1. CURRENT RATING: 0.5 AMP.
   - 1-2. VOLTAGE RATING: 40V.
   - 1-3. INITIAL CONTACT RESISTANCE EXCLUDING CONDUCTOR RESISTANCE: 10mΩ MAX (TARGET DESIGN VALUE). AFTER TEST: △30mΩ MAX.
   - 1-4. INSULATION RESISTANCE: 100MΩ MIN. @ 500V DC.
   - 1-5. DIELECTRIC WITHSTANDING VOLTAGE: 500V AC FOR 1 MINUTE.
2. MECHANICAL CHARACTERISTICS:
   - 2-1. INSERTION FORCE: 4.5Kgf MAX.
   - 2-2. WITHDRAWAL FORCE: 1.0~4.0Kgf.
3. LIFE TEST: 10,000 CYCLES.
4. OTHER GENERAL SPEC. TO REFER "HDMI SERIES SPEC".
5. TO CONFORM TO THE SINGATRON HAZARDOUS SUBSTANCE FREE SPEC.
6. HALOGEN FREE PRODUCT IDENTIFICATION LABEL ON PACKAGING:
7. PACKAGE: SEE "2HE1687 SERIES" PACKAGE.
8. FOR REFLOW SOLDERING LEAD-FREE PROCESS.

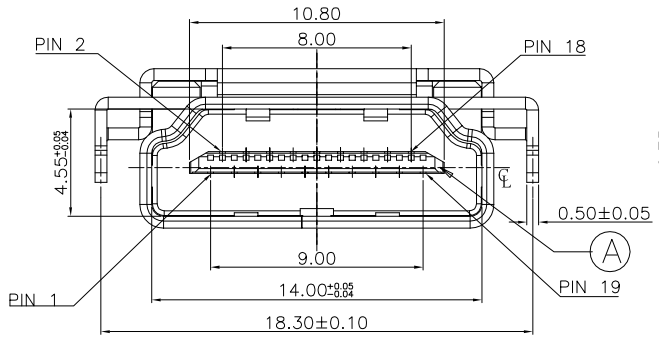

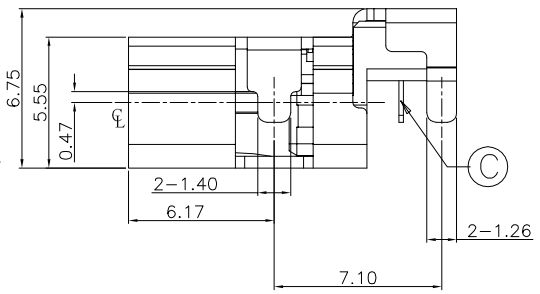

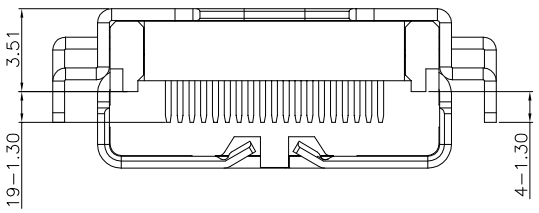

PART NO.

2HE1687-000111F

- SUFFIX: HALOGEN FREE
- PACKAGE
  1: TAPE AND REEL
- HOUSING COLOR
  1: BLACK
- CONTACT PLATING
  1: GOLD FLASH ON CONTACT AREA, GOLD FLASH ON SOLDER AREA.

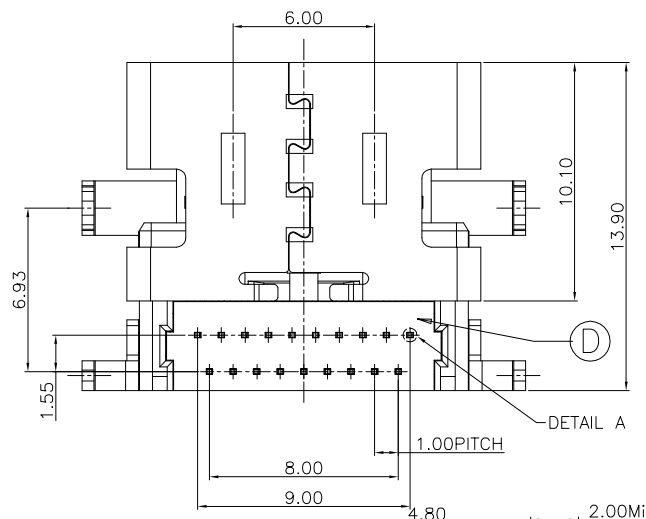

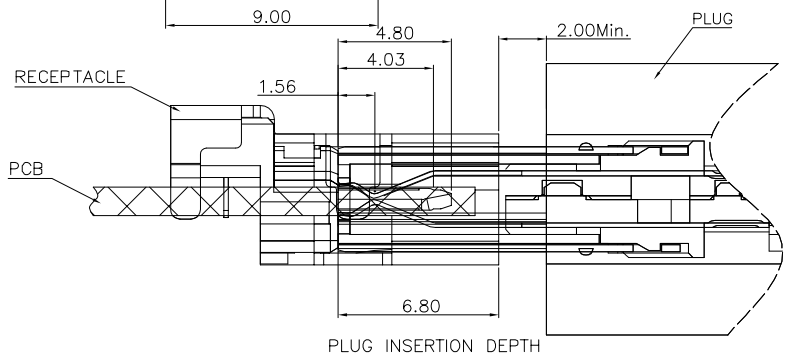

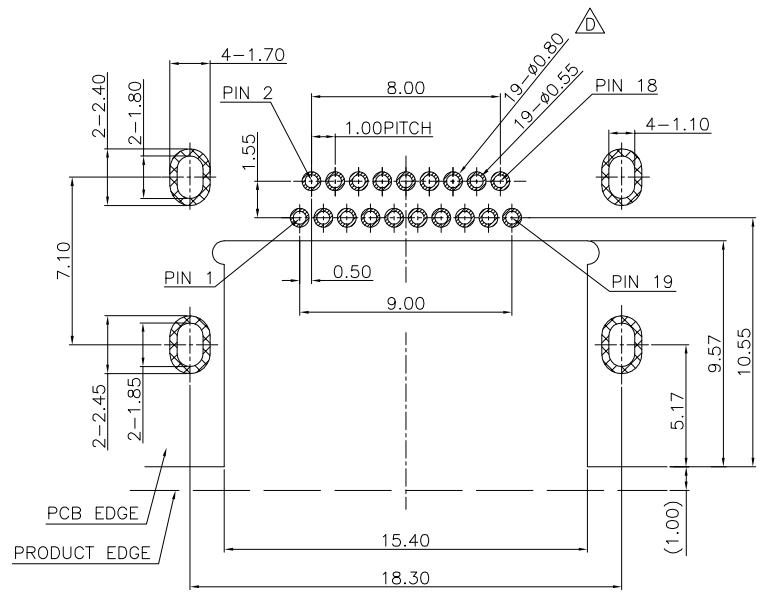

RECOMMENDED PCB LAYOUT(TOP VIEW)
(THICKNESS=1.20±0.10mm)
(TOLERANCE=±0.03mm)

NO	DESCRIPTION	QTY	MATERIAL	PLATING & COLOR
D	BOTTOM COVER	1	HIGH TEMP. THERMO-PLASTIC UL 94V-0	BLACK
C	CONTACT	19	COPPER ALLOY	SEE PART NO.
B	SHELL	1	STAINLESS STEEL	NICKEL PLATED
A	HOUSING	1	HIGH TEMP. THERMO-PLASTIC UL 94V-0	BLACK

UNLESS OTHERWISE SPECIFIED TOLERANCES

DECIMALS: X :±0.5, X.X :±0.3, X.XX :±0.2

ANGLES: X :±2°, X.X :±1°

Singatron Enterprise Co., Ltd.
信音企業股份有限公司

TITLE	HDMI A TYPE FEMALE, REVERSE, SINKING, C.H=-0.47mm		
DWN	EVEN 2017.06.22	PART NO. 2HE1687-000111F	
CHKD	ANGELA 2017.06.22	SCALE3.3:1	UNIT: mm
APVD	ANGELA 2017.06.22	SIZE: A3	SHEET:1 OF 1 REV: D

CUSTOMER COPY

文件編號 RD-06-043-A