REV.	ECN NO OR DESCRIPTION	REVISED	DATE
A	PDR RELEASE	EVEN	2020.06.12

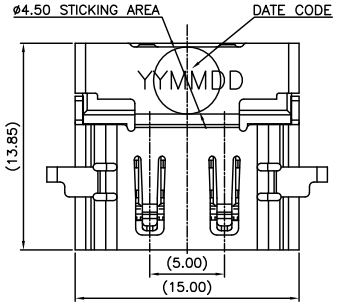

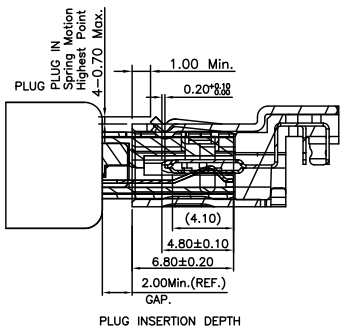

PLUG INSERTION DEPTH

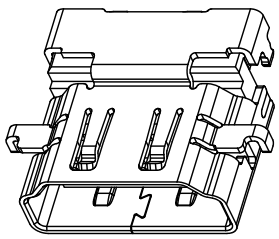

3D VIEW

SPECIFICATIONS: (HDMI A TYPE)

1. ELECTRICAL CHARACTERISTICS:
   1-1. CURRENT RATING: 0.5 AMP.
   1-2. VOLTAGE RATING: 40V.
   1-3. INITIAL CONTACT RESISTANCEEXCLUDING CONDUCTOR RESISTANCE: 10mΩ MAX. (TARGET DESIGN VALUE). AFTER TEST: △30mΩ MAX.
   1-4. INSULATION RESISTANCE: 100MΩ MIN. @ 500V DC.
   1-5. DIELECTRIC WITHSTANDING VOLTAGE: 500V AC FOR 1 MINUTE.
2. MECHANICAL CHARACTERISTICS:
   2-1. INSERTION FORCE: 4.5Kgf MAX.
   2-2. WITHDRAWAL FORCE: 1.0~4.0Kgf.
3. LIFE TEST: 10,000 CYCLES.
4. OTHER GENERAL SPEC. TO REFER "2HE1792-000111F SPEC".
5. TO CONFORM TO THE SINGATRON HAZARDOUS SUBSTANCE FREE SPEC.
6. HALOGEN FREE PRODUCT IDENTIFICATION LABEL ON PACKAGING:
7. PACKAGE: SEE "2HE1792-000111F" PACKAGE.
8. FOR REFLOW SOLDERING LEAD-FREE PROCESS.

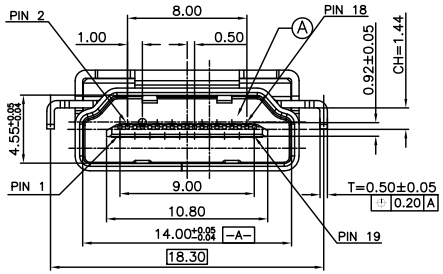

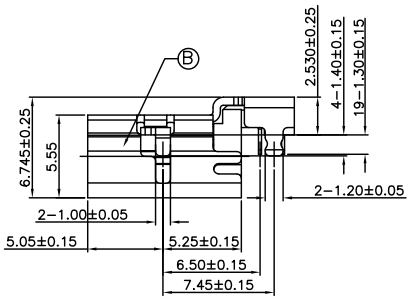

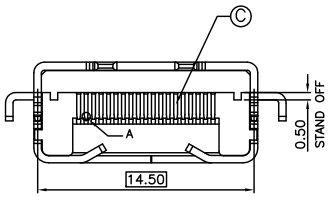

PART NO.
2HE1792-000111F

- SUFFIX: HALOGEN FREE
- PACKAGE
  1: TAPE AND REEL
- HOUSING COLOR
  1: BLACK
- CONTACT PLATING
  1: GOLD FLASH ON CONTACT AREA, MATTE TIN 60~150u'' ON SOLDER AREA. 50u" MIN. NI UNDER PLATING OVERALL

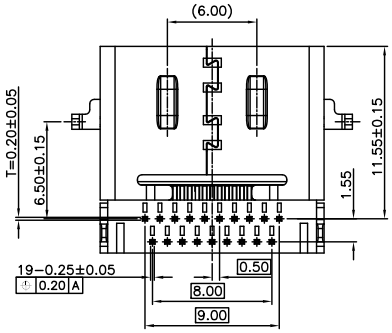

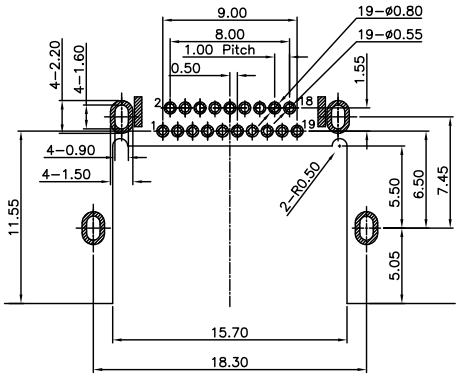

RECOMMENDED PCB LAYOUT(TOP VIEW)
(TOLERANCE=±0.05mm)

NO	DESCRIPTION	QTY	MATERIAL	PLATING & COLOR
C	CONTACT	19	C2680-H	SEE PART NO.
B	SHELL	1	SUS304	50u" MIN.NICKEL
A	HOUSING	1	LCP UL 94V-0	BLACK

UNLESS OTHERWISE SPECIFIED TOLERANCES

DECIMALS: X :±0.5, X.X :±0.3, X.XX :±0.2

ANGLES: X :±2°, X.X :±1°

Singatron Enterprise Co., Ltd.
信音企業股份有限公司

TITLE	HDMI A TYPE FEMALE, DIP TYPE		
DWN	EVEN 2020.06.12	PART NO. 2HE1792-000111F	
CHKD		SCALE1:1	UNIT: mm
APVD	ANGELA2020.06.12	SIZE: A3	SHEET:1 OF 1 REV:A

CUSTOMER COPY

文件編號: RD-06-043-A