REV.	ECN NO OR DESCRIPTION	REVISED	DATE
B	DESIGN CHANGE ECN No:C080186-3/3	CHARLIE	2008.10.08
C	ECN NO:C100115	HAODU	2010.5.18
D	ECN :C120204 MODIFY SHELL	Longjiang	2012.07.30

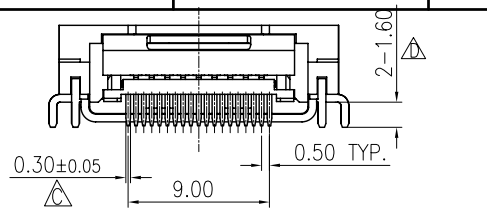

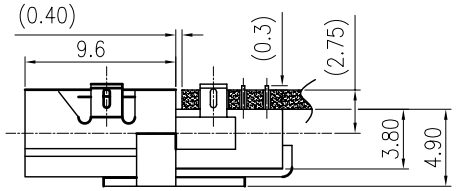

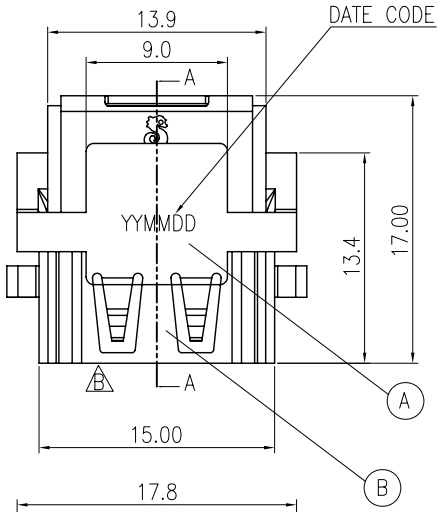

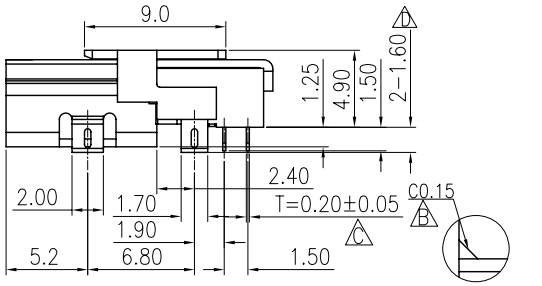

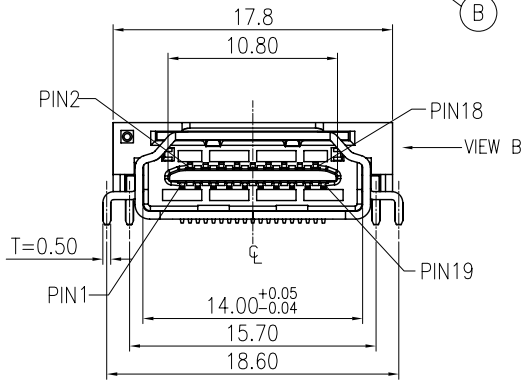

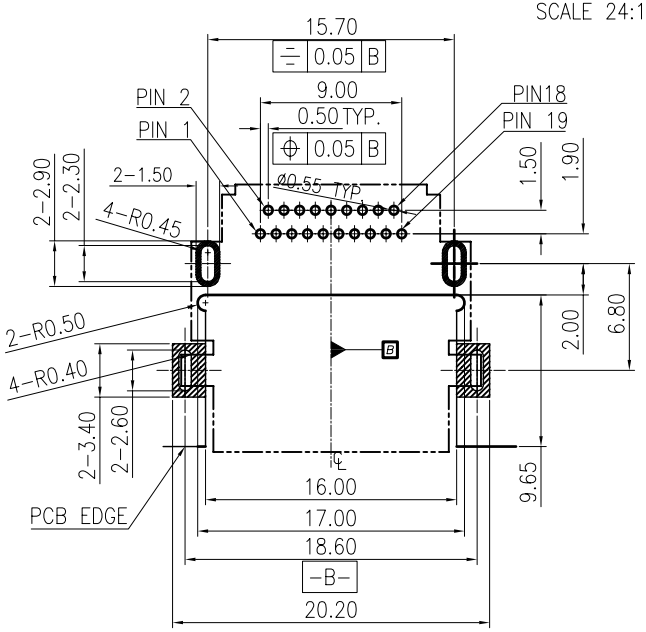

RECOMMENDED PCB LAYOUT(TOP VIEW)
PCB TOLERANCE: ±0.05, THICKNESS: 1.2 mm

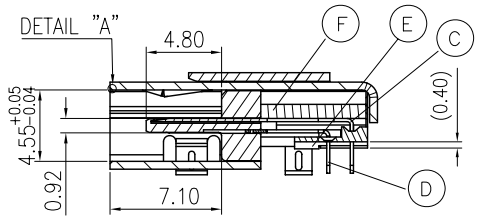

SECT A-A

SPECIFICATIONS:

1. ELECTRICAL CHARACTERISTICS:
   1-1. RATING: 40V 0.5A
   1-2. CONTACT RESISTANCE: 30mΩ MAX.(INITIAL)
   1-3. DIELECTRIC WITHSTANDING VOLTAGE: 300V AC(RMS) (MATED); 500V AC(RMS) (UNMATED)
   1-4. INSULATION RESISTANCE: 10MΩ MIN. MEASURED BY 150 VDC(MATED); 100MΩ MIN. MEASURED BY 500 VDC(UNMATED)
2. MECHANICAL CHARACTERISTICS:
   2-1. INSERTION FORCE : 4.5 KGF MAX.
   2-2. WITHDRAWAL FORCE : INITIAL :1.0~4.0KGF;FINAL :0.3~4.0KG
3. LIFE TEST: 10,000 CYCLES.
4. TO CONFORM TO THE SINGATRON HAZARDOUS SUBSTANCE FREE SPEC.
5. HALOGEN PRODUCT IDENTIFICATION MARK ON JACK: ◎
6. HALOGEN PRODUCT IDENTIFICATION LABEL ON PACKAGING:
7. FOR REFLOW SOLDERING LEAD-FREE PROCESS.
8. DATE CODE: * * * * * *
   - Day
   - Month
   - Year
9. PART NO. 2HE2000-000111
   - PACKAGE
     1: TAPE & REEL
   - BODY COLOR
     1: BLACK
   - CONTACT PLATING:
     1: GOLD PLATING 10u" ON MATING AREA. TIN ALLOY PLATING ON SOLDER TAILS, ALL OVER NICKEL PLATING.

NO	DESCRIPTION	QTY	MATERIAL	PLATING & COLOR
F	STOPPER	1	HIGH TEMP.THERMOPLASTIC UL 94V-0	BLACK COLOR
E	SPACER	1	HIGH TEMP.THERMOPLASTIC UL 94V-0	BLACK COLOR
D	LOWER CONTACT	10	COPPER ALLY 0.20t	GOLD 10u" ON MATING AREA, TIN ALLOY PLATING ON SOLDER TAIL, ALL OVER NICKEL PLATING
C	UPPER CONTACT	9		
B	SHELL	1	COPPER ALLY 0.50t	NICKEL PLATING
A	BODY	1	HIGH TEMP.THERMOPLASTIC UL 94V-0	BLACK COLOR

UNLESS OTHERWISE SPECIFED TOLERANCES

DECIMALS: X :±0.5, X.X :±0.3, X.XX :±0.2
ANGLES: X :±2°, X.X :±1°

Singatron Enterprise Co., Ltd.
信音企業股份有限公司

TITLE	HDMI REVERSE SINKING TYPE		
DWN	LONGJIANG 2012.07.30	PART NO. 2HE2000-000111	
CHKD	ZJZ 2012.07.30	SCALE 3:1	UNIT: mm
APVD	LWO 2012.07.31	SIZE: A3	SHEET: 1OF1	REV: D

CUSTOMER COPY

文件編號 RD-06-043-A