REV.	ECN NO OR DESCRIPTION	REVISED	DATE
A	PDR NO: S150318-4A	Charles	2015.10.09

Pb RoHS Compliant HF

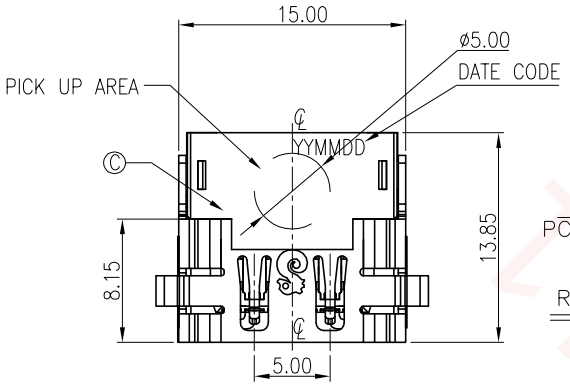

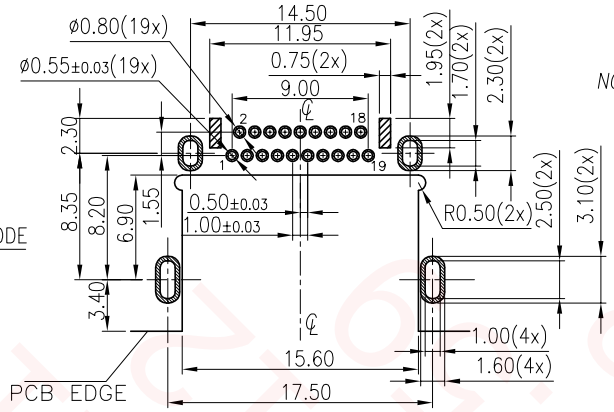

:PLASTIC STAND OFF

RECOMMENDED PCB LAYOUT(T:1.2±0.05mm:)

COMPONENT SIDE(TOL:±0.05)

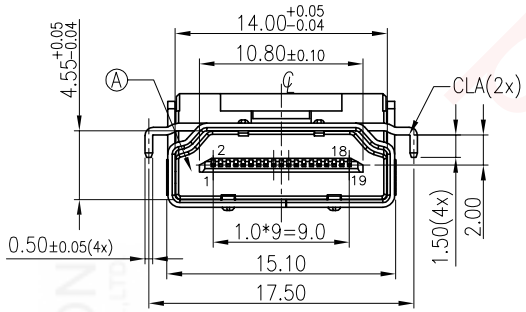

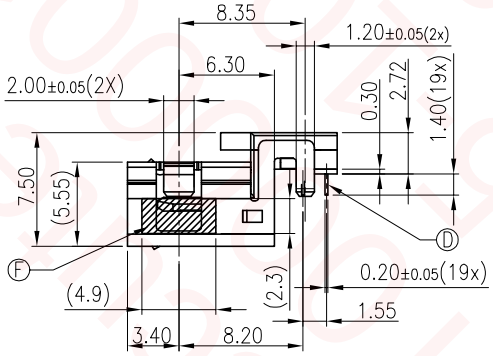

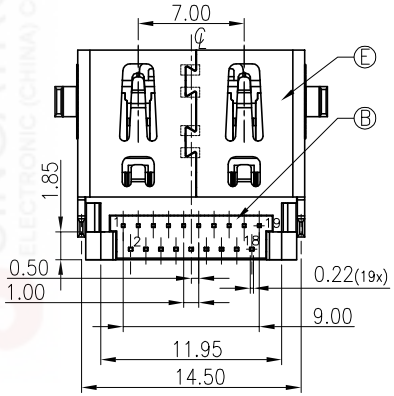

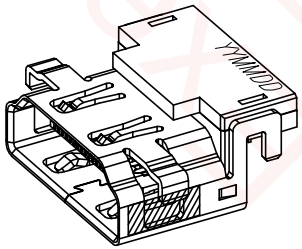

3D (REF.)

NOTES:

1.ELECTICAL CHARACTERISTICS
- 1-1 CONTACT CURRENT RATING : 0.5A MAX.
  RATED VOLTAGE : 40V AC
- 1-2 CONTACT RESISTANCE :
  INITIAL : 30 mOHMS MAX.
  AFTER TEST : CHANGE FROM INITIAL VALUE 50mOHMS MAX.
- 1-3 SHELL RESISTANCE:
  INITIAL : 50mOHMS MAX.
  AFTER TEST : CHANGE FROM INITIAL VALUE 50mOHMS MAX.
- 1-4 DIELECTRIC WITHSTANDING VOLTAGE : 500V AC RMS.
- 1-5 INSULATION RESISTANCE :
  UNMATED PLUG : 100MOHMS MIN. AT 500V DC.
  MATED PLUG : 10MOHMS MIN. AT 150V DC.

2. MECHANICAL CHARACTERISTICS:
- 2-1 CONNECTOR MATING FORCE : 44.1N(4.5Kgf) MAX.
- 2-2 CONNECTOR UNMATING FORCE :9.8~39.2N(1.0~4.0Kgf)
- 2-3 DURABILITY:10000 CYCLES.
- 2-4 OPERATING TEMPERATURE RANGE:-20~85°C.

3. OTHER GENERAL SPEC.
   TO REFER"HDMI A TYPE RECEPTACLE SERIERS_SPEC".

4. TO CONFORM TO SINGATRON HAZARDOUS SUBSTANCE FREE SPEC.

5. PART NO.
   2HE3Y37-000111F
   - SUFFIX:HALOGEN FREE
   - PACKAGE: TAPE & RELL
   - HOUSING COLOR :BIACK
   - CONTACT PLATING: GOLD PLATED
   - SEQUENCE CODE

NO	DESCRIPTION	QTY	MATERIAL	PLATING & COLOR
F	MYLAR	2	MYLAR	YELLOW, L4.9*W2.3
E	SHELL	1	STEEL ALLOY, T0.50	BLACK NICKEL
D	TERMINAL	19	COPPER ALLOY, T0.20	GOLD 5U" MIN PLATED ON CONTACT AREA MATTE TIN 100u" MIN. PLATIED ON SOLDER AREA NICKEL 40u" MIN. UNDERPLATED OVER ALL
C	TOP COVER	1	HIGH TEMP.THERMOPLASTIC	UL94V-0 , BLACK
B	BOTTOM COVER	1	HIGH TEMP.THERMOPLASTIC	UL94V-0 , BLACK
A	HOUSING	1	HIGH TEMP.THERMOPLASTIC	UL94V-0 , BLACK

UNLESS OTHERWISE SPECIFED TOLERANCES

DECIMALS: X :±0.5, X.X :±0.3, X.XX :±0.2

ANGLES: X :±2°, X.X :±1°

Singatron Enterprise Co., Ltd.
信音企業股份有限公司

TITLE	HDMI TYPE A RECEPTACLE			
DWN	Charles	PART NO.2HE3Y37-001111F		
CHKD	James	SCALE:3:1	UNIT: mm	
APVD	Boye	SIZE: A3	SHEET:1 OF 1	REV:A

CUSTOMER COPY

文件編號: RD-06-043-A