REV.	ECN NO OR DESCRIPTION	REVISED	DATE
A	PDR NO.:T181017-5A	JAY	2019.07.26
B	ECN NO.:S202205-R05	Elrod	2022.06.30
C	ECN NO.:S202211-C04	LEI	2023.01.12

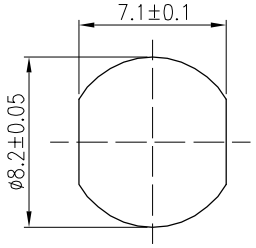

Recommended Panel Cut-Out

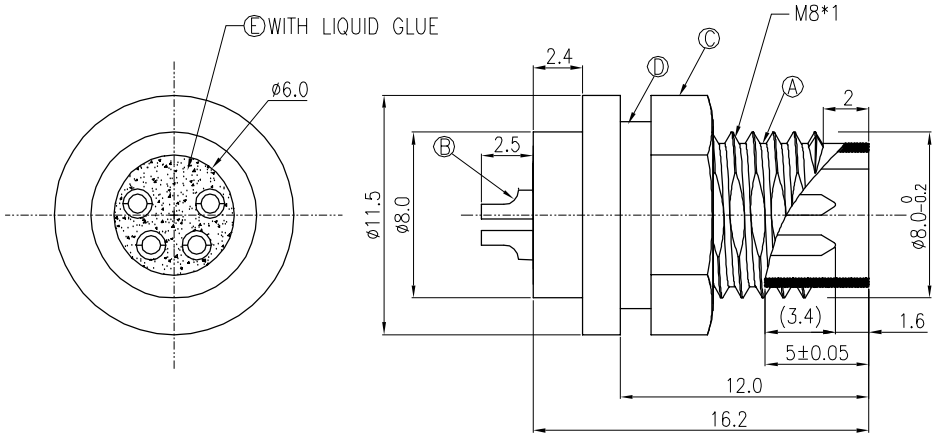

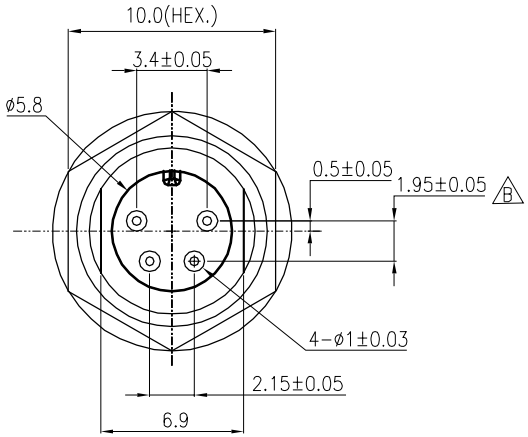

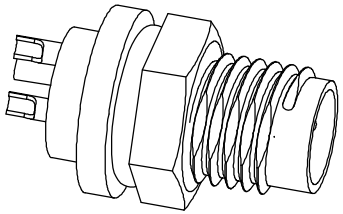

P/N	2ME3003-W04310H

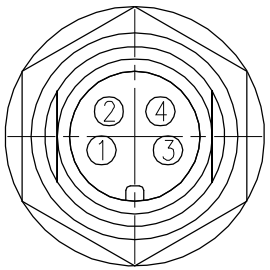

Pin Assignments
Front View

NOTES:
1. WATERPROOF RATE: IP67
   IP67: IMMERSED IN 1M WATER FOR 30 MINUTES
2. ELECTRICAL CHARACTERISTICS
   TEMPERATURE RANGE: -40°C TO +100°C
   RATING: 60V AC/DC 5A
3. SPECIFICATIONS:SEE "M8 SERIES SPECIFICATIONS".
4. TO CONFORM TO SINGATRON HAZARDOUS SUBSTANCE FREE SPEC.
5. GREEN PRODUCT IDENTIFICATION LABEL ON PACKAGING: G.P. PASS
6. FOR PANEL THICKNESS MAX OF 3.0mm
7. PIN POSITION MATCHES THE NOMINAL SIZE OF IEC 61076

NO	DESCRIPTION	QTY	MATERIAL	PLATING & COLOR
E	LIQUID GLUE	1	JA723	BLACK
D	GASKET	1	SILICON UL94V-0	PINK
C	SCREW NUT	1	PA66 (UV RESISTANT)	BLACK
B	MALE PIN	4	BRASS	6u" GOLD PLATING OVER NICKEL PLATING
A	BODY	1	PA66 (UV RESISTANT)	BLACK

UNLESS OTHERWISE SPECIFED TOLERANCES

DECIMALS: X :±0.5, X.X :±0.3, X.XX :±0.2
ANGLES: X :±2°, X.X :±1°

Suzhou Singatron Auto Electronics CO.,LTD.
蘇州信音汽車電子有限公司

TITLE	M8 SERIES MALE CONN.			
DWN	LEI	PART NO.2ME3003-W04310H		
CHKD	Jun	SCALE 2:1	UNIT: mm	
APVD	Steve	SIZE: A3	SHEET:1 OF 1	REV: C

CUSTOMER COPY

文件編號:RD-06-043-A