REV.	ECN NO OR DESCRIPTION	REVISED	DATE
A	PDR NO:A221208-6A	Elrod	2023.06.24

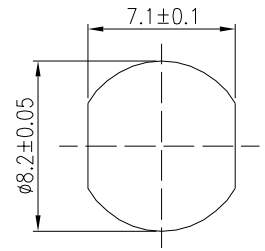

Recommended Panel Cut-Out

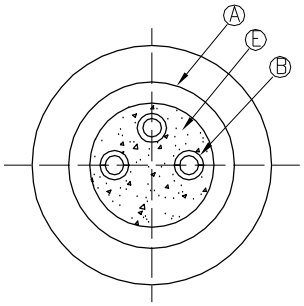

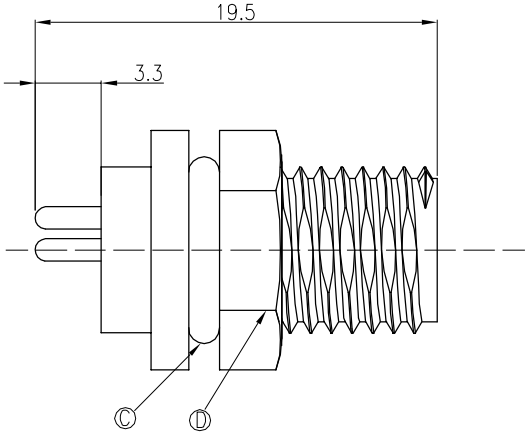

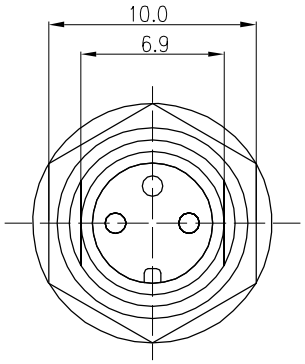

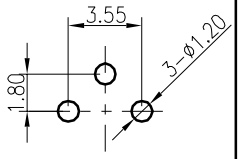

PCB LAYOUT

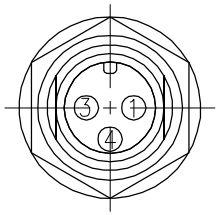

Pin Assignments
Front View

NOTES:
1. WATERPROOF DEGREE OF PROTECTION: IP67
   IP67: IMMERSED IN 1M WATER FOR 30 MINUTES
2. ELECTRICAL CHARACTERISTICS
   TEMPERATURE RANGE: -40°C TO +100°C(FOR Panel CONN.)
   RATING: 60V AC/DC 5A
3. SPECIFICATIONS:SEE "M8 SERIES SPECIFICATIONS".
4. TO CONFORM TO SINGATRON HAZARDOUS SUBSTANCE FREE SPEC.
5. GREEN PRODUCT IDENTIFICATION LABEL ON PACKAGING: G.P. PASS
6. FOR PANEL THICKNESS Max. OF 3.0mm
7. TIGHTENING TORQUES: 0.6~0.8N.m

NO	DESCRIPTION	QTY	MATERIAL	PLATING & COLOR
E	LIQUID GLUE	1	JA723A/B	BLACK
D	NUT	1	NYLON	BLACK
C	O-RING	1	VITON	RED
B	PIN	3	BRASS	1u"GOLD PLATING
A	BODY	1	NYLON	BLACK

UNLESS OTHERWISE SPECIFED TOLERANCES

DECIMALS: X :±0.5 X.X :±0.3 X.XX :±0.2
ANGLES: X :±2° X.X :±1°

Suzhou Singatron Auto Electronics CO.,LTD.
蘇州信音汽車電子有限公司

TITLE	M8 SERIES MALE CONN.		
DWN	Elrod	PART NO.2ME3005-W03300H	
CHKD	Jun	SCALE 2:1	UNIT: mm
APVD	Steve	SIZE: A3	SHEET:1 OF 1

REV: A

CUSTOMER COPY

文件編號:RD-06-043-A