REV.	ECN NO OR DESCRIPTION	REVISED	DATE
A	PDR NO.:C120416-4A~4D	Shawn	2013.02.19
B	ECN NO.:S130908	Shawn	2013.09.29
C	ECN NO.:S150546-R	Lin	2015.05.22

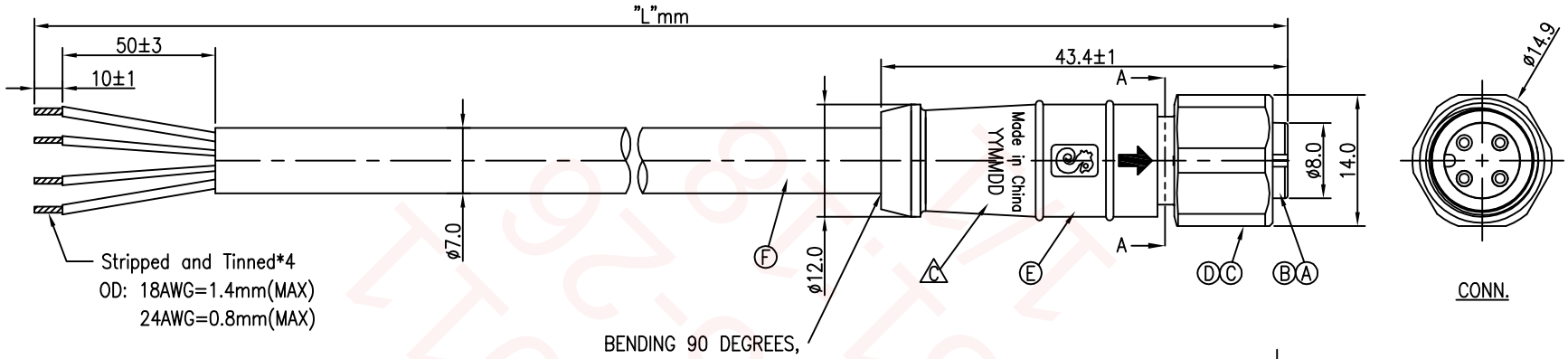

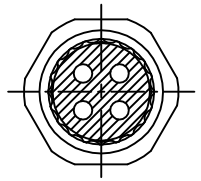

SECTION A-A

CUSTOMER P/N	SINGATRON P/N	"L"mm
TU.AC.0001201	2MT3010-W04322H	L=5000+100/-0
TU.AC.0000501	2MT3010-W04323H	L=20000+200/-0
TU.AC.0000601	2MT3010-W04324H	L=25000+250/-0
TU.AC.0000701	2MT3010-W04325H	L=30000+300/-0

WIRE COLOR	CONN.
BLACK	4
BLUE	3
WHITE	2
BROWN	1

TWIST

PIN OUT

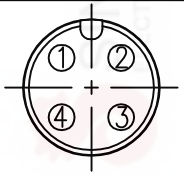

Pin Assignments
Front View

NOTES:
1. WATERPROOF RATE: IP66/IP67
2. ELECTRICAL CHARACTERISTICS
   TEMPERATURE RANGE:-40° TO +80°
   RATING: 60V AC/DC 6.2A
   TEST CONDITION: DC300V 10Mohm 10ms
3. SPECIFICATIONS:SEE "M12 SERIES SPECIFICATIONS".
4. TO CONFORM TO ROHS REQUIREMENT AND REACH REGULATION
5. GREEN PRODUCT IDENTIFICATION LABEL ON PACKAGING: G.P. PASS
6. NON-HUMAN FACTORS CASE SERVICE LIFE IS 5 YEARS
7. TORQUE FORCE: 0.8~1.0N.m
8. SUS 316F OR SAME GRADE THAT CAN PASS 200H SALT SPRAY TEST
9. (B) LASE DATE CODE "YYMMDD" ON TOP OF OVER MOLD
   DATE CODE: YYMMDD
   DAY
   MONTH
   YEAR

NO	DESCRIPTION	QTY	MATERIAL	PLATING & COLOR
F	CABLE	1	UL20549(-40°~+80°) 18#*2C+24#*1P UV RESISTANT OD=ø7.0	BLACK (PU JACKET)
E	OVER MOLD	1	TPU	BLACK
D	O-RING	1	VITON	RED
C	SCREW NUT	1	SEE"NOTE 8"	N/A
B	FEMALE PIN	4	Phosphor Bronze	6u" GOLD PLATING OVER NICKEL PLATING
A	BODY	1	TPU	BLACK

UNLESS OTHERWISE SPECIFED TOLERANCES

DECIMALS: X :±0.5, X.X :±0.3, X.XX :±0.2
ANGLES: X :±2°, X.X :±1°

Singatron Enterprise Co., Ltd.
信音企業股份有限公司

TITLE	M12 SERIES 180° 4PIN FEMALE CONN.			
DWN	Lin	PART NO.2MT3010-W0432XH		
CHKD	Harlen	SCALE 2:1	UNIT: mm	
APVD	Steve	SIZE: A3	SHEET:1 OF 1	REV: C

CUSTOMER COPY

文件編號:RD-06-043-A