REV.	ECN NO OR DESCRIPTION	REVISED	DATE
A	PDR NO.:S140805-4C	JF	2015.01.10

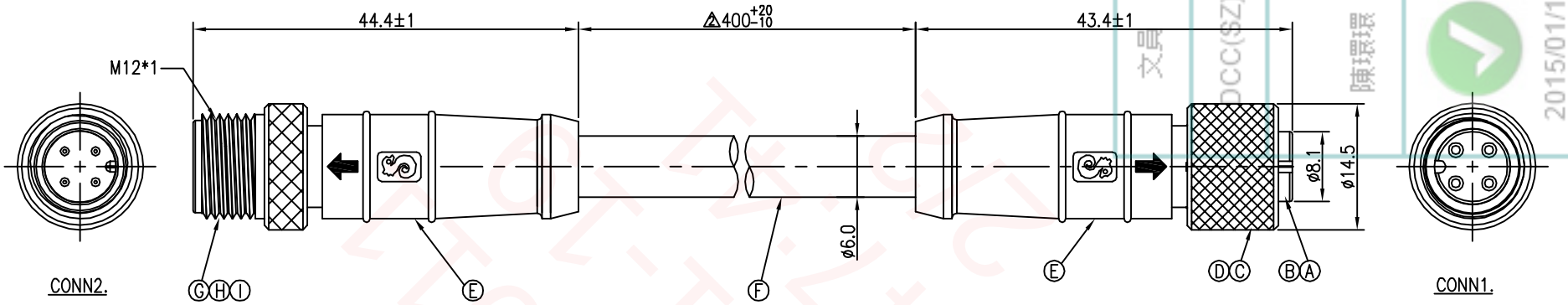

CONN2.

WATERPROOF RATE: IP67

CONN1.

WATERPROOF RATE: IP67

4	GREEN(24#)	4
3	N/A	3
2	BLUE(24#)	2
1	N/A	1
CONN2.	WIRE COLOR	CONN1.

PIN OUT

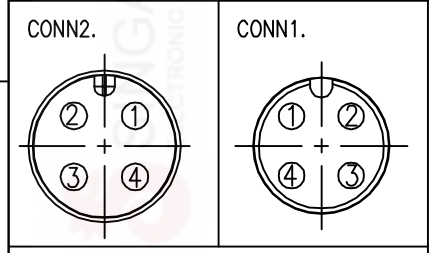

Pin Assignments
Front View

NOTES:
1. WATERPROOF RATE: IP67
2. CURRENT RATING: 5A
3. SPECIFICATIONS:SEE "M12 SERIES SPECIFICATIONS".
4. TO CONFORM TO THE SINGATRON HAZARDOUS SUBSTANCE FREE SPEC.
5. GREEN PRODUCT IDENTIFICATION LABEL ON PACKAGING: G.P. PASS

NO	DESCRIPTION	QTY	MATERIAL	PLATING & COLOR
I	SCREW NUT	1	BRASS	NATURAL
H	MALE PIN	4	BRASS	1~3u" GOLD PLATING OVER NICKEL PLATING
G	MALE BODY	1	TPU	BLACK
F	CABLE	1	UL2464 18AWG*2C+ 24AWG*3C+AL (UV RESISTANT)	BLACK(PVC JACKET)
E	OVER MOLD	2	TPU	BLACK
D	O-RING	1	VITON	RED
C	SCREW NUT	1	BRASS	NATURAL
B	FEMALE PIN	4	Phosphor Bronze	1~3u" GOLD PLATING OVER NICKEL PLATING
A	FEMALE BODY	1	TPU	BLACK

UNLESS OTHERWISE SPECIFED TOLERANCES

DECIMALS: X :±0.5, X.X :±0.3, X.XX :±0.2

ANGLES: X :±2°, X.X :±1°

Singatron Enterprise Co., Ltd.
信音企業股份有限公司

TITLE	M12 SERIES 180° 4PIN FEMALE CONN.		
DWN	JF	PART NO.2MT3010-W04368H	
CHKD	Harlen	SCALE 2:1	UNIT: mm
APVD	Steve	SIZE: A3	SHEET:1 OF 1	REV: A

CUSTOMER COPY

文件編號:RD-06-043-A

文員 DCC(SZ) 陳環環 2015/01/19 21:14:40
Executed by: 14-01-15 10:00:00