REV.	ECN NO OR DESCRIPTION	REVISED	DATE
A	PDR NO.:S150306-7A	JF	2016.07.28

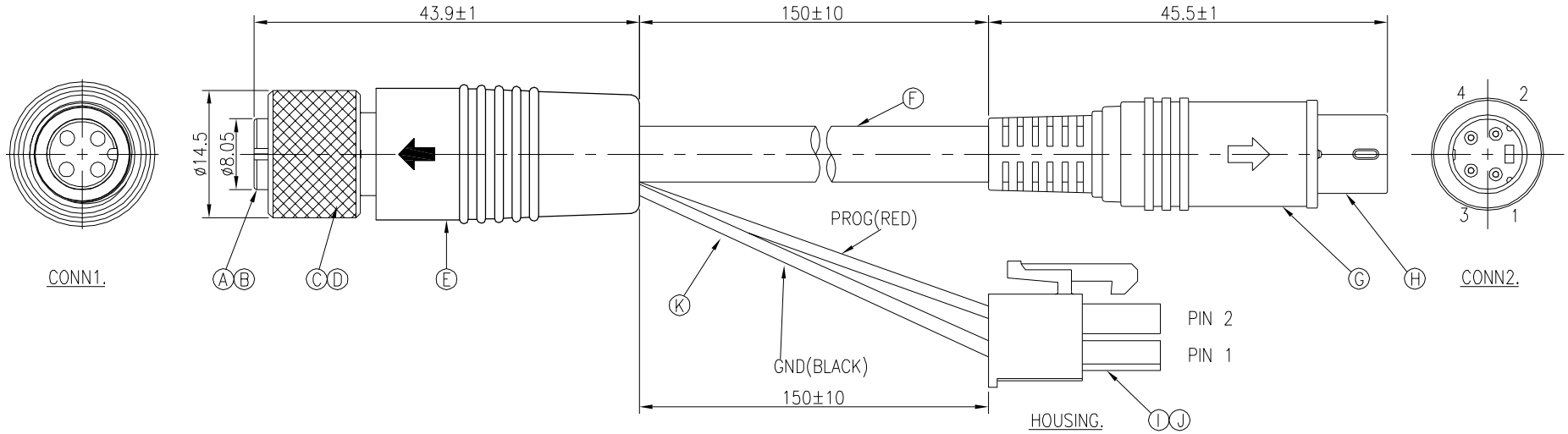

K	WIRE(客供)	2	0.5mm²	SEE PIN OUT
J	HOUSING(客供)	1	NYLON 94V-0	WHITE
I	TERMINAL(客供)	2	BRASS	TIN PLATED
H	CONNECTOR(客供)	1	4PIN MALE MINI DIN	BLACK CORE
G	OVER MOLD	1	PVC	BLACK
F	CABLE(客供)	1	18#*2C+26#*3C+28#*1COAX+F+P+B OD:6.4	BLACK (PVC JACKET)
E	OVER MOLD	1	TPU	BLACK
D	O-RING	1	VITON	RED
C	SCREW NUT	1	BRASS	NICKEL PLATING 100u"
B	FEMALE PIN	4	Phosphor Bronze	6u" GOLD PLATING OVER NICKEL PLATING
A	BODY	1	TPU	BLACK
NO	DESCRIPTION	QTY	MATERIAL	PLATING & COLOR

SHIELD	BLACK	3	GND(BLACK)	1
2	RED	4	RED	
3				
1	COAX CORE	2	COAX CORE	
4		1	PROG(RED)	2
CONN2.	CABLE WIRE COLOR	CONN1.	WIRE COLOR	HOUSING

PIN OUT

CONN2.

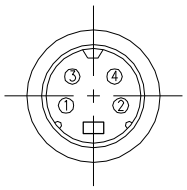

CONN1.

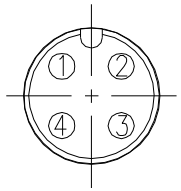

Pin Assignments
Front View

NOTES:

1. WATERPROOF RATE: IP67
   IP67: IMMERSED IN 1M WATER FOR 30 MINUTES
2. CURRENT RATING: 60V 5A
3. SPECIFICATIONS:SEE "M12 SERIES SPECIFICATIONS".
4. TO CONFORM TO THE SINGATRON HAZARDOUS SUBSTANCE FREE SPEC.
5. GREEN PRODUCT IDENTIFICATION LABEL ON PACKAGING: G.P. PASS

UNLESS OTHERWISE SPECIFED TOLERANCES

DECIMALS: X :±0.5, X.X :±0.3, X.XX :±0.2

ANGLES: X :±2°, X.X :±1°

Singatron Enterprise Co., Ltd.
信音企業股份有限公司

TITLE	M12 SERIES 180° 4PIN FEMALE CONN.			
DWN	JF	PART NO.2MT3010-W04393H		
CHKD	Yang	SCALE 2:1	UNIT: mm	
APVD	Harlen	SIZE: A3	SHEET:1 OF 1	REV: A

CUSTOMER COPY

文件編號 RD-06-043-A