REV.	ECN NO OR DESCRIPTION	REVISED	DATE
A	PDR NO.:T141128-3A	Vicky	2014.11.28

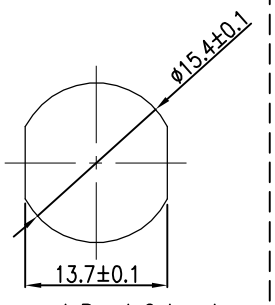

Recommend Panel Cut-out

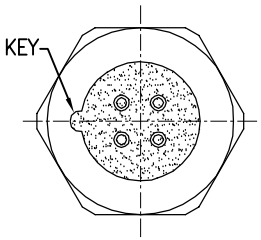

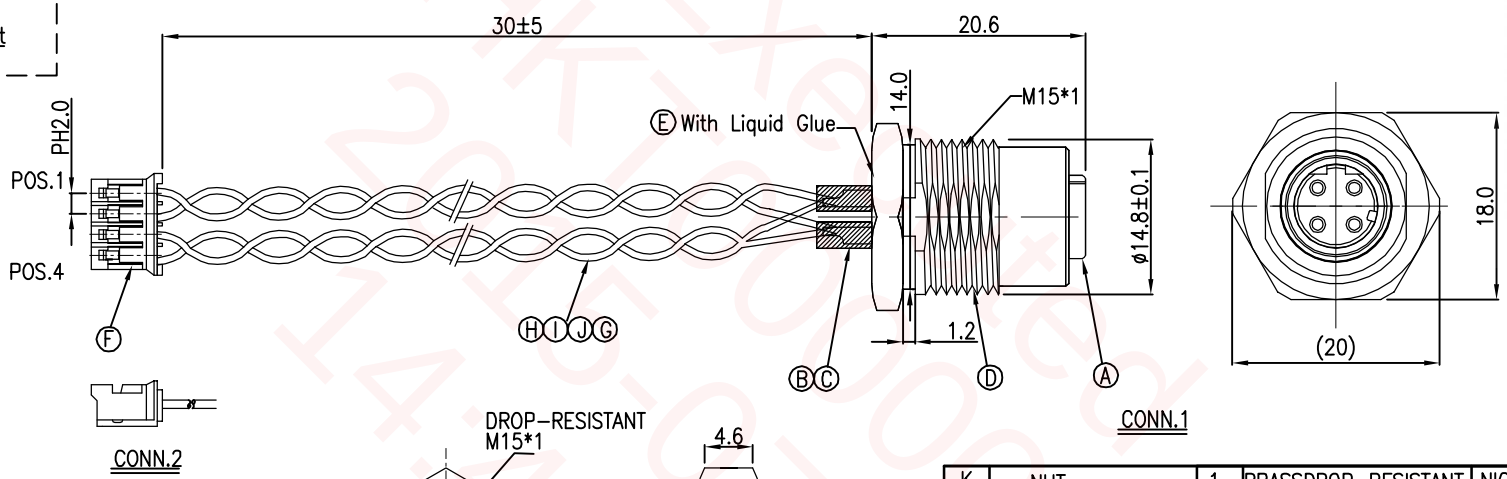

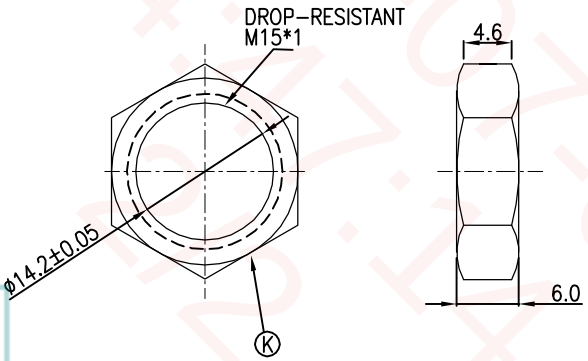

CONN.2	WIRE COLOR	CONN.1	
1	WHITE	2	TWIST
2	GREEN	4	
3	RED	1	TWIST
4	BLACK	3	

PIN OUT

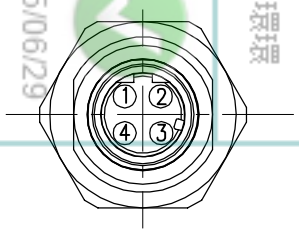

Pin Assignments
Front View

NOTES:
1. ELECTRICAL CHARACTERISTICS
   TEMPERATURE RANGE: -40°C TO +100°C(PANEL)
   RATING: 60V AC/DC 5A
   DIELECTRIC WITHSTANDING VOLTAGE: 500V AC FOR ONE MINUTE
2. SPECIFICATIONS:SEE "M12 SERIES SPECIFICATIONS".
3. TO CONFORM TO SINGATRON HAZARDOUS SUBSTANCE FREE SPEC.
4. GREEN PRODUCT IDENTIFICATION LABEL ON PACKAGING: G.P. PASS
5. FOR PANEL THICKNESS MAX OF 3.0mm
6. NUT TORQUE: 11.5kgf.cm Max.
7. NUT以附件形式包裝出貨.

NO	DESCRIPTION	QTY	MATERIAL	PLATING & COLOR
K	NUT	1	BRASSDROP-RESISTANT	NICKEL PLATING 100u"
J	WIRE	1	UL1007 26AWG	GREEN
I	WIRE	1	UL1007 26AWG	WHITE
H	WIRE	1	UL1007 26AWG	RED
G	WIRE	1	UL1007 26AWG	BLACK
F	CONNECTOR	4	COPPER	TIN
		1	NYLON 66	WHITE
E	LIQUID GLUE	1	N/A	BLACK
D	SHIELD	1	BRASS	NICKEL PLATING 100u"
C	SHRINK TUBE	4	ø2.4*10mm 含膠	BLACK
B	FEMALE PIN	4	Phosphor Bronze	6u" GOLD PLATING OVER NICKEL PLATING
A	BODY	1	PA66+GF	BLACK

UNLESS OTHERWISE SPECIFED TOLERANCES

DECIMALS: X :±0.5, X.X :±0.3, X.XX :±0.2
ANGLES: X :±2°, X.X :±1°

Singatron Enterprise Co., Ltd.
信音企業股份有限公司

TITLE	M12 D-CODED SERIES FRONT MOUNT FEMALE CONN. (4PIN) HEXAGONAL BACKSHELL			
DWN	Vicky	PART NO.2MT3404-W04317H		
CHKD	Harlen	SCALE 2:1	UNIT: mm	
APVD	Steve	SIZE: A3	SHEET:1 OF 1	REV: A

CUSTOMER COPY

文件編號RD-06-043-A

SINGATRON ELECTRONIC (CHINA) CO.,LTD.
Executed HK1000021 2015-07-01 14:47:02
2015/06/29 09:31:05
陳環環
DCC(SZ)