REV.	ECN NO OR DESCRIPTION	REVISED	DATE
A	ECN NO.S141059	YUREN	2014.12.12

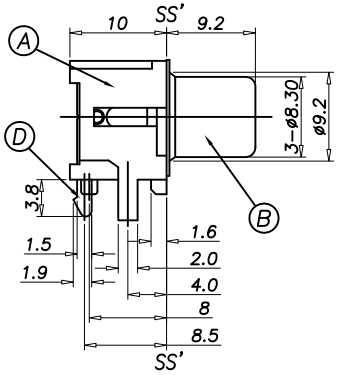

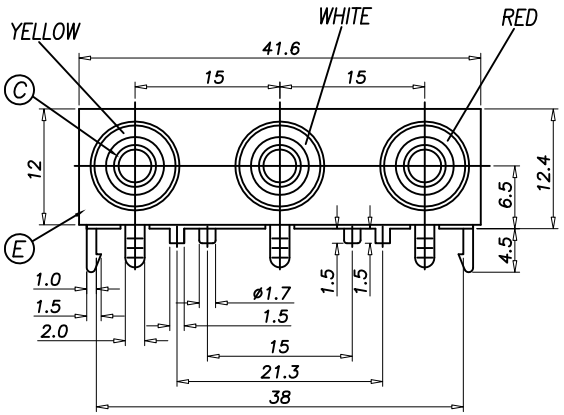

SPECIFICATION

1. Voltage and Current Rating: 12V & 1A
2. Contact resistance: 30mΩ max.
3. Insulation resistance: 100MΩ (min) @ DC500V
4. Withstand voltage: 500VAC for 1minute.
5. Insertion Force: 3Kgf max.
6. Withdraw Force: 0.3Kgf min.
7. Withdraw Force for Center Contact: 0.08Kgf min. (Use a OD=3.2±0.005mm, Length=14±0.2mm Gauge Plug)
8. Terminal Strength: The terminal shall be capable of withstanding a force of 3Kgf applied in any direction for 0.5 seconds without lossing and breakdown
9. Life test: 1500 cycles
10. Temperature Range: −25°C~70°C
11. GREEN PRODUCT IDENTIFICATION LABEL IN PACKING: G.P. PASS
12. SOLDER HEAT RESISTANCE: WAVE SOLDERING 260°C 5SECS.
13. TO CONFORM TO THE SINGATRON HSF SPECIFICATION".
14. SEE "2PJ-S35A SERIES" SPECIFICATION
15. PACKAGE : SEE "2PJ-S35A SERIES" PACKAGE

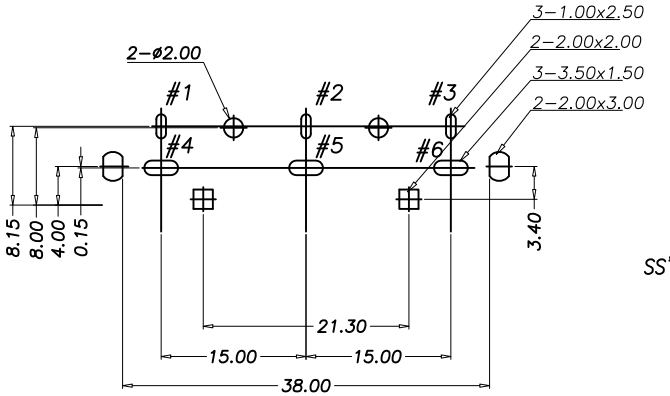

Recommend PCB Layout
(Jack Top View)
Tolerance: ±0.05
Recommend PCB Thickness: 1.6mm

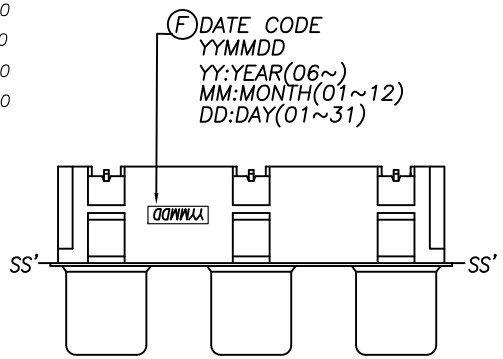

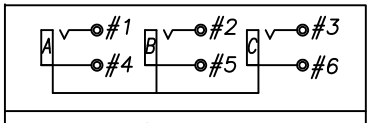

Schematic

NO	DESCRIPTION	QTY	MATERIAL	PLATING & COLOR
F	INK	1	Domino IR-270BK & MC-270BK	BLACK COLOR
E	SHIELD	1	BRASS 0.3t	Cu/Sn PLATING
D	TERMINAL #1,2,3	3	BRASS 0.5t	Cu/Sn(2um Min.) PLATING
C	WASHER	3	PBT UL94V-0	SEE "TABLE 1"
B	TERMINAL #4,5,6	3	BRASS 0.4t	Cu/Sn(2um Min.) PLATING
A	HOUSING	1	PBT UL94V-0	BLACK COLOR

UNLESS OTHERWISE SPECIFED TOLERANCES

DECIMALS: X :±0.5, X.X :±0.3, X.XX :±0.2

ANGLES: X :±2°, X.X :±1°

Singatron Enterprise Co., Ltd.
信音企業股份有限公司

TITLE	RCA JACK		
DWN	YUREN	PART NO.2PJ-S35A-A03	
CHKD	Cerry	SCALE:2:1	UNIT: mm
APVD	Liao	SIZE: A3	SHEET: 1 OF 1 REV: A

CUSTOMER COPY

文件編號:RD-06-043-A