"*": INDICATES THE KEY DIMENSIONS ["*"為重點尺寸]

* REVISIONS				
LTR	DESCRIPTION	DATE	REVISED	APPROVED
⚠X1	修改尺寸符合實物	2011.10.28	ANJOU	GIEVEN

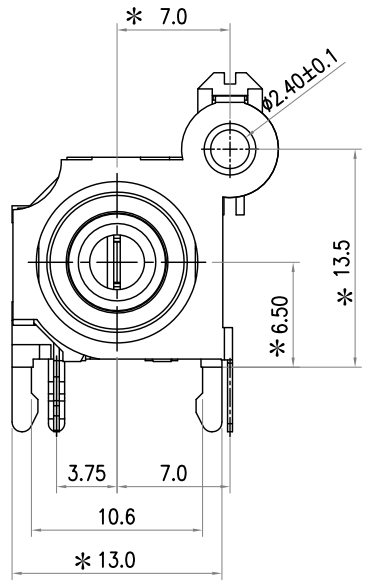

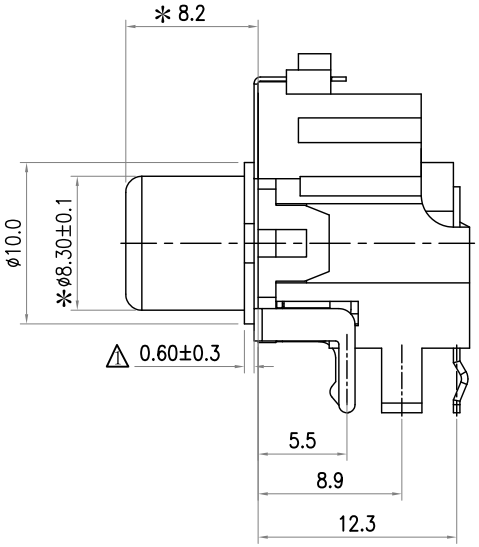

Notes:
1. Electrical Characteristics:
 1-1.Rating ：DC 12V 1 A；
 1-2.Contact Resistance: 30mΩ Max.(Initial),
 Between plug and contact 100mΩ Max;
 (Final) After Life test:≤60mΩ；
 1-3.Dielectric Withstanding Voltage: 500V AC for One Minute；
 1-4. Insulation Resistance: 100MΩ Min. Measured By 500 VDC;

2. Mechanical Characteristics:
 2-1. Plug Insertion Force 0.3~3.0Kgf (initial),
 0.3~3.0Kgf (Final) life test;
 2-2. Plug Extraction Force: 0.3~3.0Kgf (initial),
 0.3~3.0Kgf (Final) life test;

3. Durability Test: 500 Cycles min;
4. Operating temperature:-25˚C ~ +70˚C;
5. Soldering Heat Resistance Reflow Soldering 230˚C;
6. Plug Interface Dimensions Conform To EIAJ RC-5231A Spec;
7. Packaging:Tray;

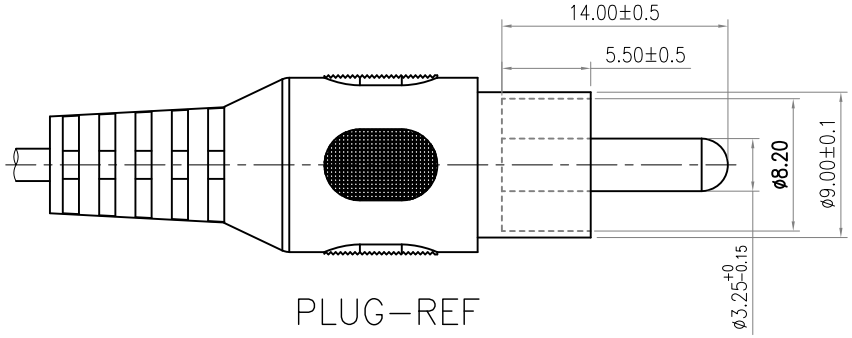

Table"

MODEL NO.	COLOR OF HOUSING
2PJ-W241V20G	ORANGE
SCHEMATIC	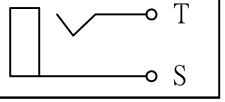

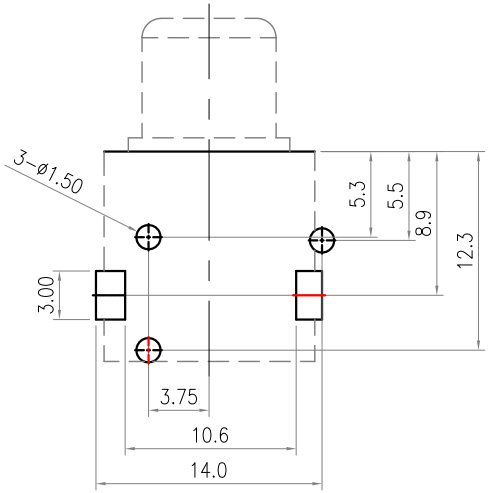

Recommend of PC Board Holes
Tolerance : ±0.05(Printed-Bottom view)

LEAD FREE

LTR	PART NAME	QTY	MATERIAL	REMARK
5	SEALED PLATE	1	BRASS t=0.3	MB:Cu Cu/Sn PLATED
4	TERMINAL	1	BRASS t=0.3	MB:Cu Cu/Sn PLATED
3	OUTER CONTACT	1	BRASS t=0.3	MB:Ni Gold Flash
2	COVER	1	ABS	UL-94HB(BLACK)
1	HOUSING	1	ABS	UL-94HB Color See Table"

-TOLERANCES- UNLESS OTHERWISE SPECIFIED 公差	
X.X ±0.30	X.X° ±3°
X.XX ±0.25	X.XX° ±1°
X.XXX ±0.20	

Singatron Enterprise Co., Ltd.

TITLE	PIN JACK		
DWN	HULUN 2005.11.08	PART NO. 2PJ-W241V20G	
CHKD	GAO WEI 2005.11.08	SCALE 1:1	UNIT: mm
APVD	JACKY 2005.11.08	SIZE: A3	SHEET:1 OF 1 REV: 001

CUSTOMER COPY

文件編號:RD-06-043-A