NOTES:
尺寸标示带 ◎ 號的尺寸,均为冲铆后需要重点管控的尺寸。

✳ REVISIONS				
LTR	DESCRIPTION	DATE	REVISED	APPROVED

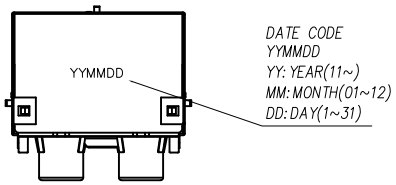

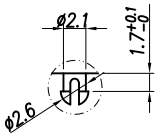

DETAIL A
SC 2:1

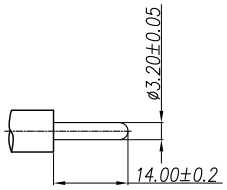

GAUGE PLUG

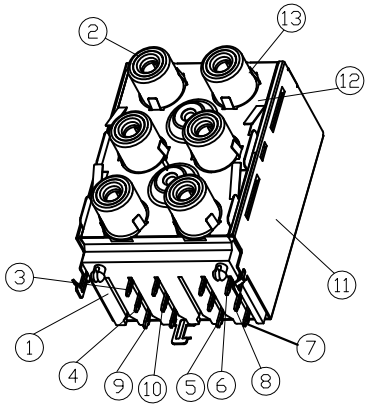

table1

WASHER COLOR		
A	B	C
GREEN	WHITE	BLUE
D	E	F
RED	RED	YELLOW

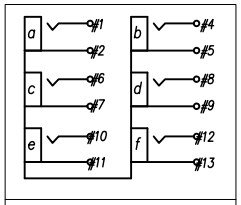

Schematic

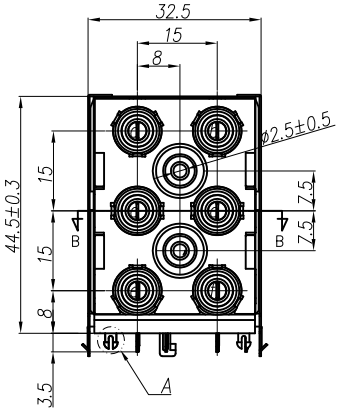

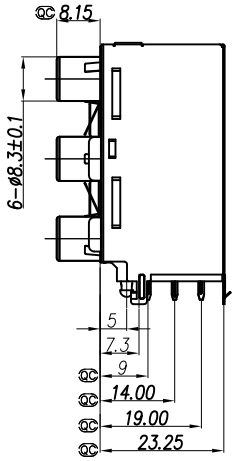

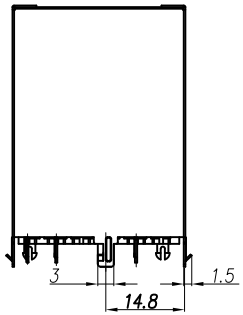

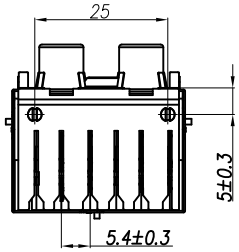

Circuit Diagram

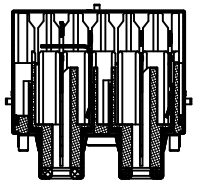

SECT.B-B

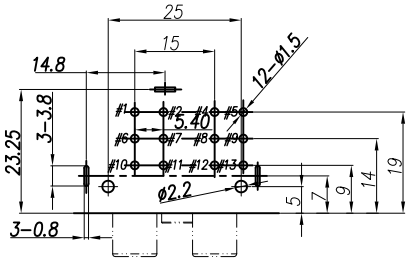

T:1.6 Dimensions of PC board holes

Tolerance : ±0.1(Printed-Top view)

UNLESS OTHERWISE SPECIFIED, TOLERANCE ON DECIMAL: ±0.3

LEAD FREE

LTR	PART NAME	QTY	MATERIAL	REMARK
13	OUTER CONTACT	6	BRASS	MB:Cu Cu/Sn PLATED
12	COVER	1	SUS301	N/A
11	SHELL	1	SPCC	MB:Cu Cu/Sn PLATED
10	CONTACT #8	1	BRASS	MB:Cu Cu/Sn PLATED
9	CONTACT #7	1	BRASS	MB:Cu Cu/Sn PLATED
8	CONTACT #6	1	BRASS	MB:Cu Cu/Sn PLATED
7	CONTACT #5	2	BRASS	MB:Cu Cu/Sn PLATED
6	CONTACT #4	2	BRASS	MB:Cu Cu/Sn PLATED
5	CONTACT #3	1	BRASS	MB:Cu Cu/Sn PLATED
4	CONTACT #2	2	BRASS	MB:Cu Cu/Sn PLATED
3	CONTACT #1	2	BRASS	MB:Cu Cu/Sn PLATED
2	WASHER	6	PBT	UL94-V0 (SEE TABLE 1)
1	HOUSING	1	ABS	UL94-HB (BLACK)

DWN	H.RP	DATE	2013.12.09	3RD ANGLE PROJECTION	NAME PIN JACK
CHKD	GAOWEI	DATE	2013.12.09		CAT. NO. 2PJ-W290V3B-01H
APVD	GAOWEI	DATE	2013.12.09	UNIT: mm	
SINGATRON U.S.A.					DWN.NO. 06-290V3B 001