* REVISIONS				
LTR	DESCRIPTION	DATE	REVISED	APPROVED
1	產品工程變更	2007.06.04	SPAIN	QI

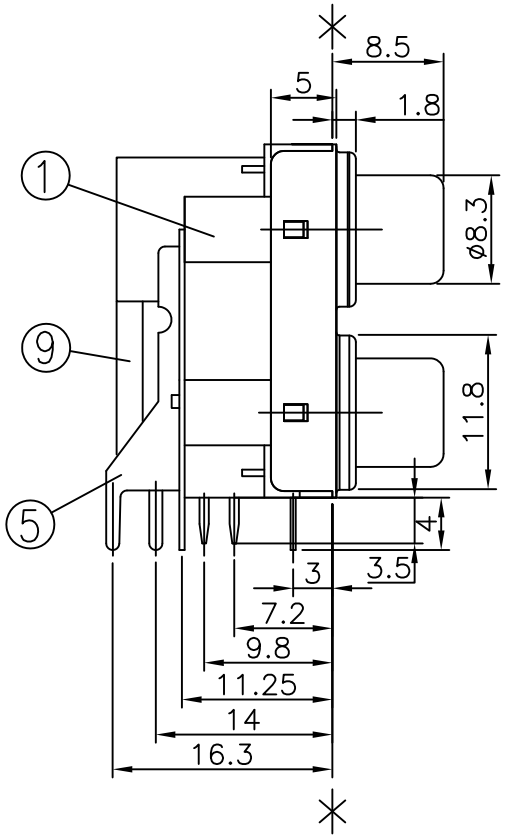

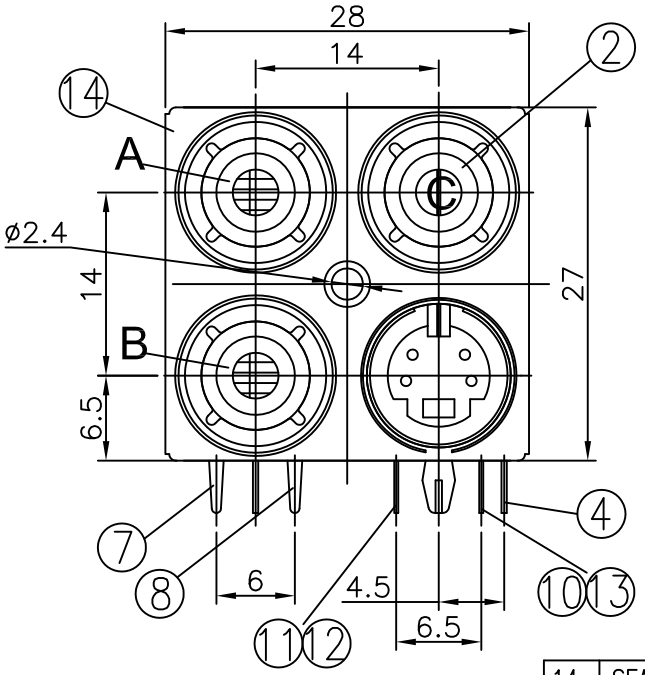

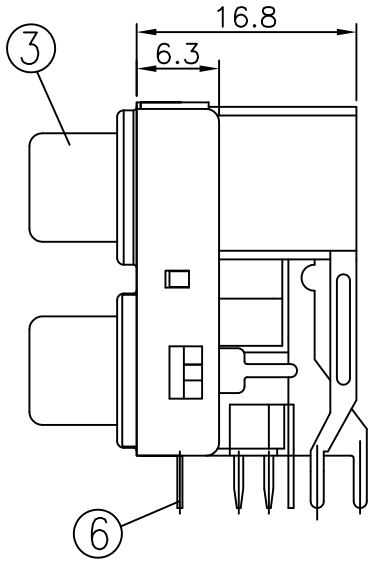

COLOR		SCHEMATIC DIAGRAM
A	C	
B		

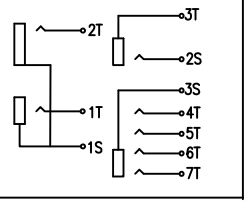

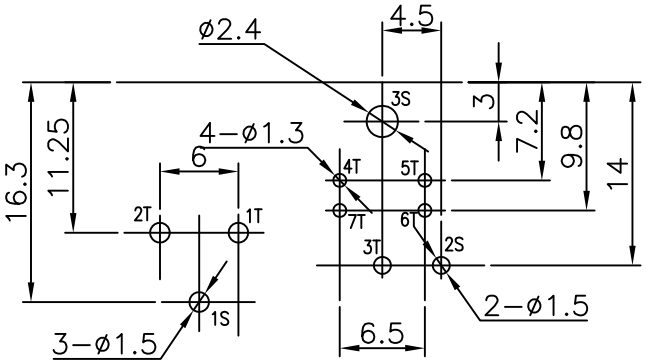

T:1.6 Dimensions of PC board holes

Tolerance : ±0.1(Printed-side view)

UNLESS OTHERWISE SPECIFIED, TOLERANCE ON DECIMAL: ±0.3

LTR	PART NAME	QTY	MATERIAL	REMARK
14	SEALED PLATE	1	C2680 t=0.3	MB:Cu Cu/Sn PLATED
13	TERMINAL	1	C2680 t=0.4	MB:Cu Ag PLATED
12	TERMINAL	1	C2680 t=0.4	MB:Cu Ag PLATED
11	TERMINAL	1	C2680 t=0.4	MB:Cu Ag PLATED
10	TERMINAL	1	C2680 t=0.4	MB:Cu Ag PLATED
9	TERMINAL	1	C2680 t=0.5	MB:Cu Cu/Sn PLATED
8	TERMINAL	1	C2680 t=0.4	MB:Cu Cu/Sn PLATED
7	TERMINAL	1	C2680 t=0.4	MB:Cu Cu/Sn PLATED
6	GROUND CONTACT	1	C2680 t=0.3	MB:Cu Ag PLATED
5	EARTH FITTING	1	C2680 t=0.4	MB:Cu Cu/Sn PLATED
4	EARTH FITTING	1	C2680 t=0.4	MB:Cu Cu/Sn PLATED
3	OUTER CONTACT	3	C2680 t=0.4	MB:Cu Cu/Sn PLATED
2	WASHER	3	PBT 4815	UL-94V0
1	HOUSING	1	PBT 4815	UL-94V0(BLACK)

DWN	spain	DATE	2006.05.05	3RD ANGLE PROJECTION	NAME PIN JACK+S JACK
CHKD	qi	DATE	2006.05.05		CAT. NO. 2PJ-WT04061V2
APVD	JACKY	DATE	2006.05.05	UNIT: mm	
SINGATRON U.S.A.					DWN.NO. KY-04061V2 002