REV.	ECN NO OR DESCRIPTION	REVISED	DATE
A	PDR NO.:A200410-3A	Vicky	2020.08.24
B	ECN NO.:S202012-R06	RZ	2020.12.04

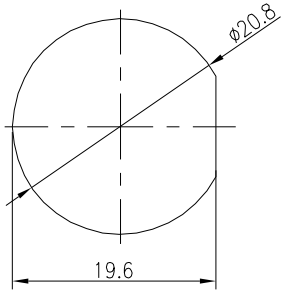

RECOMMENDED PANEL CUT-OUT

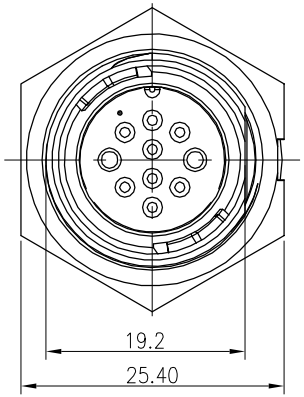

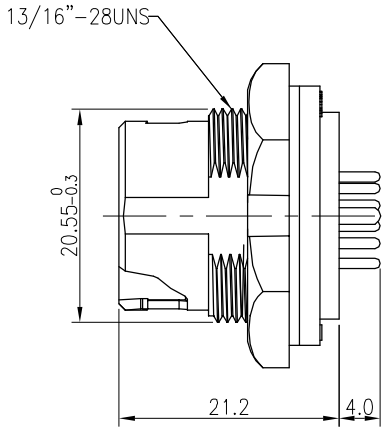

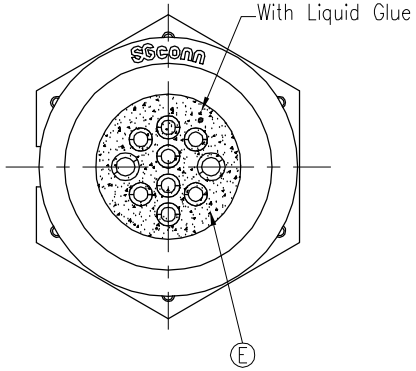

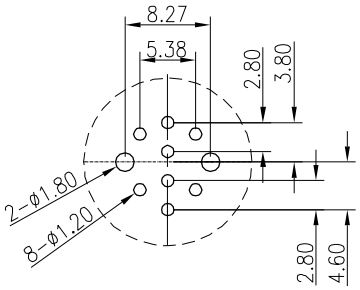

PCB Layout

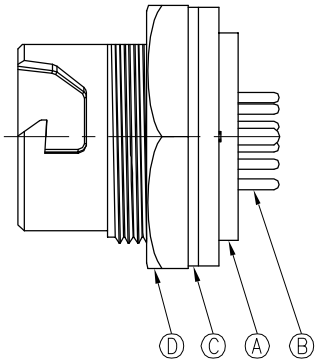

CONN.

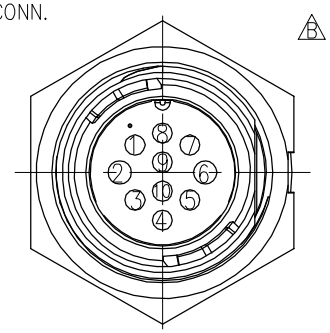

PIN ASSIGNMENTS
FRONT VIEW

NOTES:
1. WATERPROOF RATE: IP67
   IP67: IMMERSED IN 1M WATER FOR 30 MINUTES
2. ELECTRICAL CHARACTERISTICS:
   2-1 CURRENT RATING: 5+10 AMPS.
   2-2 CONTACT RESISTANCE: 30 mOhm Max.
   2-3 INSULATION RESISTANCE: 100 MOhm Min. at 500VDC.
   2-4 BREAKDOWN VOLTAGE: 500 VAC PER MINUTE.
   TEMPERATURE RANGE: -40°C TO +100°C
   CURRENT RATING: 5A+10A
   DIELECTRIC WITHSTANDING VOLTAGE: 500V AC FOR ONE MINUTE
3. SPECIFICATIONS:SEE "CIRCULAR SERIES SPECIFICATIONS".
4. TO CONFORM TO SINGATRON HAZARDOUS SUBSTANCE FREE SPEC.
5. GREEN PRODUCT IDENTIFICATION LABEL ON PACKAGING: G.F. PASS
6. FOR PANEL THICKNESS MAX OF 3.5mm

NO	DESCRIPTION	QTY	MATERIAL	PLATING & COLOR
E	LIQUID GLUE	1	N/A	BLACK
D	NUT	1	PA66	BLACK
C	GASKET	1	EPDM	BLACK
B	MALE PIN	10	BRASS	(1~3)u"Gold Plating Over Nickel Plating
A	BODY	1	PA66	BLACK

UNLESS OTHERWISE SPECIFED TOLERANCES

DECIMALS: X :±0.5, X.X :±0.3, X.XX :±0.2
ANGLES: X :±2°, X.X :±1°

Suzhou Singatron Auto Electronics CO.,LTD.
蘇州信音汽車電子有限公司

TITLE	QUICK SERIES MIDDLE SIZE (PCB) MALE CONN. MALE (2+8) PIN(10A+5A)			
DWN	RZ	PART NO.2QM3000-W10700H		
CHKD	Cerry	SCALE 2:1	UNIT: mm	
APVD	William	SIZE: A4	SHEET:1 OF 1	REV: B

CUSTOMER COPY

文件編號 RD-06-043-A